ROBOTICS · MICROCONTROLLERS · BUILD-IT-YOURSELF PROJECTS · TUTORIALS · CIRCU

# Nuts & Volts

EVERYTHING FOR ELECTRONICS!

October 2000
Vol. 21 No. 10

**Exploring Electronics And Technology For A New Millennium**

## An Arcade-Quality Game Controller For Your Computer

## Build This Updated Model Rocket Launcher

**Flame Flicker Simulator**

**Using Basic to Generate G-Code**

**Miscellaneous 555 Circuits**

**Build An Electronic Digital Barometer**

**AND MORE!**

U.S. $4.50 CANADA $6.50
10>
7 25274 89295 2

www.nutsvolts.com

# PROFESSIONAL DISK DUPLICATION

## CLONE, TEST OR REPAIR ANY HARD DRIVE

**$995!**

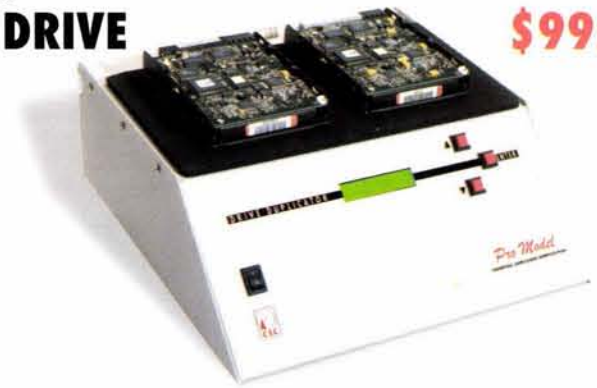

- SUPPORTS IDE, SCSI, SCA & NOTEBOOK DRIVES
- COPIES AND SERVICES HARD DRIVES
- PRINTS TEST REPORTS ON YOUR PRINTER
- DATA RECOVERY MODE BUILT-IN

Copy entire hard drives with this pro service station. Set up any SCSI or IDE drive with your original software. Attach a blank drive and press start. Make copies quickly and easily.

Use the built-in drive service system to make used drives run like new! Eliminate defective sectors, and restore hard drives to error-free condition with the factory re-mapping system. Test hard drives for top reliability using the built-in test feature. Print analysis reports on any standard parallel printer. Get the technology used by drive repair services. Call today!

## COPY ANY CD NOW NO PC REQUIRED

**from $995!**

- MULTI-FORMAT DUPLICATION - FAST AND EASY!
- DUAL 8X DRIVES MAKE TWO COPIES AT ONCE
- INTERNAL 25GB HARD DRIVE STORES IMAGES
- PRO AUDIO MODEL HAS SP/DIFF AND ANALOG I/O

Instantly copy music and CD-ROM compact discs. Make backup copies of your favorite music and software on rugged, permanent CDs. Produce discs quickly and economically. Make custom audio CDs with just the songs you like.

Use our dual drive units to copy two CDs simultaneously, or choose the Pro Audio modelto make crystal clear music CDs from any analog or digital source. Dupe-It copiers are totally self-contained. No additional software or hardware is required. Call today for more information!

## 25GB MP3 PLAYER

**$395!**
**after mail-in rebate**

- PLAYS OVER 10,000 SONGS FROM HARD DISK!
- PLAYS STANDARD AUDIO AND MP3 CDs AND CD-R
- DOWNLOADS MP3 FROM CD-R TO HARD DRIVE
- POWER AMPLIFIER DRIVES SPEAKERS DIRECTLY

MP3 is here! Get high performance digital sound and store over 15,000 songs on hard disk. Download over 300 songs from a single CD!

Grab new music from the net. Use your PC to create custom MP3 CDs with just the songs you like. Load them to the internal hard drive for realistic, 3-D theater sound. Patented digital signal processing gives you crystal clear sound. No PC connection is required. Connect any stereo system, or directly power external speakers. Get digital sound and room-filling bass.

The hard drive organizes your music in folders. ID-3 tags display the title, album, and artist on a large LCD. Use the jukebox feature for an entire evening of great music. Play songs randomly or in sequence from the internal hard drive. Unlike CD changers, the A/V certified 25 GB hard drive won't wear out, even under continuous use. Call now and try your MP3 player tomorrow!

## MULTI DRIVE IDE DUPLICATORS

**from $495!**

- COPIES EVERYTHING, PARTITIONS, O/S, THE WORKS!
- BOTH STANDARD AND ULTRA, FOUR AND SEVEN DRIVE MODELS ARE AVAILABLE NOW!
- THE ULTIMATE HIGH SPEED PRODUCTION TOOL FOR SYSTEM BUILDERS AND CORPORATE MIS

Copy entire hard drives with ease. Multi-drive duplicators are an essential tool for dealers and system builders. Why spend hours installing and formatting drives when you can dupe them instantly? Work like the pros. Get your own multi-drive, stand-alone duplicators today. CSC offers a complete line of four and seven drive copiers in both standard and ultra versions. Ultra models transfer data faster than any hard drive! Rates of over 1GB per minute are supported.

Set up any IDE drive with all your original software. Attach blank target drives, and press "start". It's that easy! You can duplicate four drives in less time than it takes to copy one on a fast PC! Your duplicate drives will be identical, bit-for-bit perfect copies, with all the files, partitions, and information on the original drive. Building systems is tough enough. Why spend hours installing software? Save time. Save money. Call today and let us Fed-X your duplicator for a risk-free evaluation!

**CORPORATE SYSTEMS CENTER**
3310 WOODWARD AVE. • SANTA CLARA, CA 95054
WWW.DUPEIT.COM
**408 330-5524**

Over 80% of the Fortune 500 depend on CSC products. Shouldn't you? Call today. Most orders ship within 24 hours! Call now for more information and a free price comparison guide. Quantity discounts are available for dealers and system builders. Copyright laws must be observed when duplicating CDs and hard drives. © 2000 CSC.



Write in 94 on Reader Service Card.

# HSC Electronic Supply

Serving Silicon Valley since 1964!

...brings you a potpourri of high-tech goodies for the techno-tinkerer!
For thirty years we have been your source for Silicon Valley exotica!

## License-Free Two-Way Radio!

- Fanon "Courier KF-310, factory-new in box!
- Stay in touch at the park, in the mall or on the road!
- Transmits up to two-mile range without a license
- Full-power (.5W) with extras not found on others!
- LCD backlit display for use day or night
- Uses new "Family Radio Service band -- all 14 channels, plus 38-channel CTCSS encode-decode
- VOX or Push-to-talk, w/3-type call tone
- Auto "power save" mode, auto-squelch
- Monitor button, speaker/mic jack, wrist strap
- Uses four "AAA" batteries (not included)
- Perfect for camping, sports, road trips, work...more!

Now...Special Bulk Purchase allows us to offer a reduced price!

Extra Special! Pack of 16 AAA Heavy Duty batteries, only $2.95!

**HSC#18198** **$39.95/ea**
**...or Get TWO for** **$74.95**

## CD-R Media Bargain!

- "Artmedia" 8X speed premium CDs
- 650 MB / 74 minute capacity
- 2x, 4x, 6x or 8x speed recording
- Compatible with all leading CD writers/readers
- Fully compliant with the 'Orange Book Standard'
- Brand new, sealed, includes jewel case!
- Box contains ten disks -- Best deal!

**HSC# 18363 $.49 ea. or $3.95/Box 10**

## SCSI Drive Cases

***Just in...two new styles of SCSI drive case. Perfect for those RAID systems, server backup, or other mass storage systems! Both feature: Power and drive status LEDs, front panel off/on switch, SCSI ID switch, fan-cooled switching power supply. Attractive beige color, curved front panels. Rear panel is punched for SCSI-1 (ICN-50) daisy-chain connectors, internal SCSI cable not included. Brand new in box, 90-day warranty***

- Two-bay case
- RCA Jacks/ Sound Cable incl.
- Measures 6.3" x 7.0" x 11.25"
- 80-watt power supply

**HSC# 18267** **$39.95**

- Four-bay case
- Measures 10.3" x 7.125" x 14.3"
- 200-watt power supply

**HSC#18268** **$49.95**

## Useful Utilities!

- Supercharge Windows with PowerDesk!
- Drag, drop files with multiple views, built-in ZIP utility
- View over 80 types of files -- Super search engine!
- Powerful email attachment decoder
- Instant graphic view of hard drive space
- Many more features...too much to list here!
- Windows 3.1, 95, 98 & NT compatible

**HSC#18360** **$9.95**

- Conquer Zip files with "ZipMaster"!
- Use ZIP files without unzipping
- Saves tons of disk space!
- Makes regular ZIP files look like folders
- Integrated viewing previews over 50 file formats
- Handles ZIP, Z, RAR, ZOO, ARJ, GZ, TAR...MORE!
- Windows 3.1, 95, 98 & NT compatible

**HSC#18361** **$9.95**

- Keep after the glitches with "Fix-It Utilities 99"
- Powerful diagnostic and repair package
- View, open/convert 12 file types, 4 email formats
- Over a dozen hardware diagnostics
- NTFS, FAT, and FAT32 disk repair
- Integrated views for Work, Excel, PowerPoint, AVI files...MORE!
- For Windows 95, 98 & NT

**HSC#18362** **$9.95**

## Talk to your Computer!

- "Voice Express - Standard" software by L & H
- Talk...and your computer does the rest!
- Learns your voice in about 5 minutes
- 300,000+ vocabulary, with plug-in support
- "Say It Your Way" commands!
- Boost productivity + voice-enable applications!
- Works with Win 95/98/NT, Lotus, Corel, AOL...MORE!

**HSC#18365** **$14.95**

- "Voice Express - Advanced" software by L & H
- Learns your voice in about 5 minutes
- Accurately turns your voice to text
- "Say It Your Way" commands!
- Boost productivity + voice-enable applications!
- Works with Win 95/98/NT, Lotus, Corel, AOL...MORE!

**HSC#18364** **$19.95**

- "Voice Express - Mobile Pro" software by L & H
- Includes pocket-sized digital voice recorder!
- Speech recognition learns your voice in under 10 minutes! Works with favorite Window apps!
- "Say It Your Way" commands! 230,000+ words
- Dictate on the run or in the office
- Voice-enable 100's of applications!
- For Win95, 98 & NT

**HSC#18366** **$69.95**

## Rack-mount Chassis!

- Rugged construction for heavy duty server use
- Supports all standard ATX motherboards
- Industry standard 4U height
- 250W standard/350W surge high output supply
- Filtered cooling system, locking front panel
- Can mount up to ten drives
- Folding front handles, mounting ears & accessories
- Brand new, boxed with 90-day warranty
- Available in black or cream textured finish

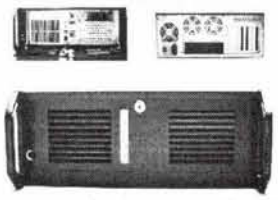

**HSC# 80540 Black** **$195.00**
**HSC# 80541 Cream** **$195.00**

## Comfort Keyboard!

- Dell Internet Keyboard, made by 'Microsoft'
- Special Internet "hot" keys for quick, mouse-less commands -- Ergo shape for comfort!
- Brand New...boxed, with PS/2-style connector
- HSC 90-day warranty

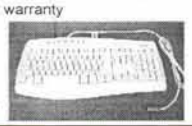

**HSC#18367** **$14.95**

## CAT-5e Cable Special!

- 350+ Enhanced CAT5e 100MHz horizontal cable
- 4-Pair, 24 AWG solid conductor
- Meets UL/CSA TIA/EIA 56IA standards
- Exceeds proposed 1 GHz Standards
- Available in White, Blue or Grey - Your choice
- Price is for 1000' spool -- wire your house!

**HSC#5E8XX1001** **$69.00**

## Multimeter Specials!

- Model #AEEC-1890 3 1/2 Digit LCD DMM
- Adjustable large flip-up display for the easy viewing
- 0.5% basic accuracy, dual-slope integration A/D
- Measures AC/DC volts, ohms, current, capacitance, hFE & temperature (temp. probe included!)
- Ranges: 1000VDC, 700VrmsAC, 200 ohm - 200 Megohm, 20 mA - 20A, 2nF - 20 uF, NPN/PNP hFE
- Separate jacks for capacitors and transistors
- 'HOLD' function to capture measured peaks
- Soft rubber cradle protects meter, prevents skids
- Brand new! - With test leads
- Compare at prices of $70, $80 and up!

**HSC# 80504** **$39.95**

- Some people just don't like digital meters...
- Soltec HM102S 20 KOhm per Volt Multitester
- Ranges: 0-1000VDC, 0-1000VAC, 0-50uA,0.5, 5, 50 & 500 mA, 0-20 MOhm with X1, X10, x1K & X10K ranges
- Standard banana-plug test leads, manual included
- Carrying handle/stand, measures 3.5" x 5.25" x 1.5", mirrored dial for parallax-corrected readings
- New...90-day warranty

**HSC# 18260** **$9.95**

## Keypad Mouse!

- 'Unia' mouse with multi-function keypad!
- Numeric & special function keys, including SHIFT, ALT, RETURN
- Unique all-in-one ergo design for easy data entries
- Ideal for CAD, spreadsheet, games...etc
- LED indicators, 400/1200dpi switchable
- PC/AT compatible, w 9-pin D conn.
- New, 90-day warranty

**HSC# 80539** **$9.95**

## Power Supply Specials!

- 'Liteon' model no. PS-5151, 145 watts
- 5V @ 18A, 12V @ 5A, -12V @ 0.8A 3.3V @ 7A, +5Vsb @ 0.15A
- Hi-Pot tested w/large cooling fan
- Standard ATX Form-factor
- Brand-new, 90-day warranty

**HSC# 18350** **$12.95**

- 'Liteon' model no. PS-4151-9B, 150 watts
- 5V @ 18A, -5V @ .3A, 12V @ 4.6A, -12V @ 0.3A
- Hi-Pot tested w/large cooling fan
- Standard AT "Mini Tower" Form-factor
- Brand-new, 90-day warranty

**HSC# 18351** **$14.95**

- Power Computing TCX-20D
- Perfect for upgrading! Put modern motherboards into older cases
- 200W fan-cooled power supply
- Standard Mini-tower form-factor, ATX connector
- Units are brand new w/90-day warranty

**HSC#18304** **$17.50**

## SCSI Adapters for PC's

- Initio INI-9100AS high-performance PCI host adapter
- Supports 32-bit data transfers up to 133MB/sec, 10MB/sec. sync transfers
- PNP compatible, includes manual & driver disk
- PCI 2.1 compliant, auto-termination on board
- Compatible with CD & CD-Rs, optical & tape drives, scanners, 'Zip' & 'Jaz' drives, NON-bootable

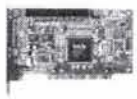

**HSC#18218** **$29.50**

- Adaptech model AVA-1505AI -- Brand Name Quality!
- Single, complete PC connection
- For ***single*** non-bootable SCSI2 peripheral
- New, OEM pack, with install diskette & manual

**HSC#17995** **$17.50**

***Special!*** **...w/DB25 adapter & cable** **$19.95**

**Halted specialties co. HSC Electronic Supply**

Toll Free (Orders Only) 1-800-4 HALTED (1-800-442-5833)
***Internet World Wide Web:*** ***http://www.halted.com***
3500 Ryder St., Santa Clara, CA 95051 (408) 732-1573 -or-
4837 Amber Ln., Sacramento, CA 95841 (916) 338-2545 ***FAX your orders to:***
5681 Redwood Dr., Rohnert Park, CA 94928 (707) 585-7344 ***(408) 732-6428***

## Visit HSC's Website!

- Pay us a virtual visit on the World Wide Web!
- Simply point your browser to ***http://www.halted.com***
- Site is constantly being revised, please visit often!
- Or, you can email your order to ***hscmail@halted.com***

## Weekly Web Specials!

- A new section has been added to our web page!
- Simply go to www.halted.com and click the top button!
- Items from our ads, as well as non-advertised items
- Also, you can download our catalog as Adobe PDF files

Terms: Some quantities limited; all items subject to prior sale. Minimum order: $10.00 plus shipping. Orders under $20.00 subject to $2.00 handling fee, in addition to shipping. All orders shipped FOB Santa Clara, CA (this means you pay freight!) by UPS Surface (no P.O. Boxes) unless otherwise specified, in which case prevailing carrier rate plus $5.00 handling fee applies. Prepaid orders that don't include shipping charges will be shipped freight COD. There is a $5.00 UPS charge added to shipping charges for COD shipments. If you have questions about your order, please call Customer Service at (408) 732-1854 M-F 9AM to 5PM PST.

Write in 98 on Reader Service Card.

Call our subscription *order only* line at 1-800-783-4624!!

# Contents

VOLUME 21 • NO. 10 • OCTOBER 2000

**Meet our Design Contest 2nd Place and 3rd Place Winners**

**Lots of details on Pages 48-49!!**

## columns ...


**AMATEUR ROBOTICS NOTEBOOK** 32
**Robert Nansel**
Robert begins a design dialog on what goes into building robots to meet specific requirements. This month, he leads off with what it takes to build an elementary two-wheel drive system for a sumo bot.

**ELECTRONICS Q & A** 16
**TJ Byers**

**OPEN CHANNEL** 78
**Joe Carr**
Using the P-I-N Diode
The PIN diode has a number of uses that are unique, and will do some of the same jobs as regular signal diodes, only better. This month's column looks at the structure of the PIN diode and some of its applications.

**STAMP APPLICATIONS** 64 **Jon Williams**
A Stamp-II ISD Sound Lab
Last month's project — the pet trainer — used the ISD in its simplest mode. However, with a little more work and some more connections, you can make the ISD25xx do all sorts of cool things, like adding speech to your favorite projects.

Page 32

Page 43

Page 25

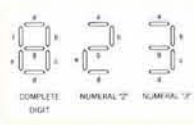

Page 20

Page 5

**Classified Ad Index**

| | | | |
|---|---|---|---|
| 10. Ham Gear For Sale | 41 | 125. Microcontrollers | 60 |
| 20. Ham Gear Wanted | 0 | 130. Antique Electronics | 60 |
| 30. CB/Scanners | 41 | 135. Aviation Electronics | 61 |
| 40. Music & Accessories | 0 | 140. Publications | 61 |
| 50. Computer Hardware | 42 | 145. Robotics | 61 |
| 60. Computer Software | 42 | 150. Plans/Kits/Schematics | 62 |
| 70. Computer Equip. Wanted | 56 | 155. Manuals/Schem. Wanted | 0 |
| 80. Test Equipment | 56 | 160. Misc. Electronics For Sale | 62 |
| 85. Security | 56 | 170. Misc. Electronics Wanted | 75 |
| 90. Satellite Equipment | 58 | 175. BBS & Online Services | 75 |
| 95. Military Surplus Electronics | 58 | 180. Education | 75 |
| 100. Audio/Video/Laser | 58 | 190. Business Opportunities | 75 |
| 110. Cable TV | 59 | 200. Repairs/Services | 75 |
| 115. Telephone/Fax | 60 | | |
| 120. Components | 60 | | |

**Departments**

| | | | |
|---|---|---|---|
| Advertiser's Index | 82 | News Bytes | 18 |
| Classified Ad Info | 82 | NV AdMart | 75-77 |
| Dealer Directory | 63 | NV Bookstore | 87 |
| Events Calendar | 38 | Prize Drawing | 44 |
| New Product News | 93 | Reader Feedback | 18 |
| | | Tech Forum | 84 |


Nuts & Volts (ISSN 1528-9885) is published monthly for $19.00 per year by T & L Publications, Inc., 430 Princeland Court, Corona, CA 92879. PERIODICALS POSTAGE PAID AT CORONA, CA AND AT ADDITIONAL MAILING OFFICES. POSTMASTER: Send address changes to Nuts & Volts, 430 Princeland Court, Corona, CA 92879-1300.

## ... articles


**AN ARCADE-QUALITY GAME CONTROLLER FOR YOUR COMPUTER** 5 **Phil Combs**
Play those classic video arcade games from the 1980's with your own customized controller.

**PROSTHETIC SARCASM WITH EMOTICONS FOR SPEECH** 10
**Tim Deagan**
Can't find the words for what you have to say? Then go digital! Whether you're giving a digital wink to someone across a crowded bar or an LED thumbs up to someone speaking on a stage, this device lends you all the incredible power of ASCII graphics and more! ;-)

**FAMILY RADIO SERVICE MORE THAN TOY WALKIE-TALKIES** 20 **Gordon West**
FRS is now a part of many local radio systems and has earned the respect of even seasoned radio amateurs who originally thought the 14 license-free channels would become another Class D CB bungle.

**BUILD AN ELECTRONIC SOLAR-POWERED DIGITAL BAROMETER** 25 **Anthony J. Caristi**
To some, the current barometric reading is a bit of a mystery. Learn what this weather parameter means, plus build your own electronic barometer which requires no external power source.

**BUILD A MODEL ROCKET LAUNCHER** 43 **Fernando Garcia**
Blast off efficiently and safely with this updated launcher.

**USING BASIC TO GENERATE G-CODE** 50
**Matthew Evans**
An industry standard method to control a CNC milling machine after it's built is to create a G-code file that is interpreted by the milling machine's computer. This article explores using Basic programming to create the G-code instruction file.

**MISCELLANEOUS "555" CIRCUITS** 70 **Ray Marston**
Discover a variety of unusual ways to use a 555 timer IC in applications such as Schmitt triggers, astable gadgets, alarms, and long-period timers.

**THE "XYLOTRON" — 'BOT WITH A BEAT** 88
**Bob Lang**
You'll be singing praises when you construct this musical project — turn a xylophone into a MIDI instrument that can be played manually or by a computer interface.

**FLAME FLICKER SIMULATOR** 92
**Dennis Eichenberg**
Keep your candle burning with this simple circuit. It's ideal for jack-o-lanterns!

by Phil Combs

# An Arcade-Quality Game Controller For Your Computer

**Photo 1. My arcade controller.**

How many hours of your time, and quarters, were spent on video games in the 1980's? Although most of those games are long gone, many people worldwide still want to play them. It's now possible with your PC, Macintosh, Unix, or Linux box, Amiga, and even a certain digital camera! This is done using a software program called an emulator that uses data from the original game ROM (read-only memory) chips.

Playing those old arcade games can be enjoyable, but using a computer keyboard as a controller takes away from the experience. I built my own arcade-quality input device to solve that problem. This is not a step-by-step article on how to exactly duplicate my controller. Like all input devices, a gamer's interface to the machine is a highly personal choice. I will give you enough information to see how mine went together, and will point you to the sources of the components you'll need to construct your own controller.

## Background

There are many fine arcade game emulators available on the Internet today, with names like MAME, MESS, Raine, and Impact. I consider MAME — or the Multiple Arcade Machine Emulator — the granddaddy of them all. MAME supports over 2,000 games and has dozens of people worldwide contributing to its ongoing development.

This emulator program was born in 1997, under the hands of Nicola Salmoria. He had written several arcade emulators that played specific games. Nicola decided to combine them using a common emulation engine, with drivers for different types of arcade hardware. As the number of supported games became too large for one person to maintain, other people stepped in to assist.

These programmers, known as the MAME Team, support what is now officially called a 'documentation project.' The project's aim is to preserve the games and assist people who repair and maintain the original arcade game cabinets. A side benefit of these preservation efforts is a freely distributable program that allows game fans to play those classic games again.

What do you need to play the games in your home? I won't go into the details of copyright law here, as this info is clearly spelled out on the many Internet sites supplying ROM images. However, you should own the original arcade hardware, usually just the main processor board, of the games you wish to emulate before downloading their ROM images. Each

**Photo 2. The front-panel layout is clean and uncluttered.**

**Photo 3. An inside view of the controller's layout and wiring.**

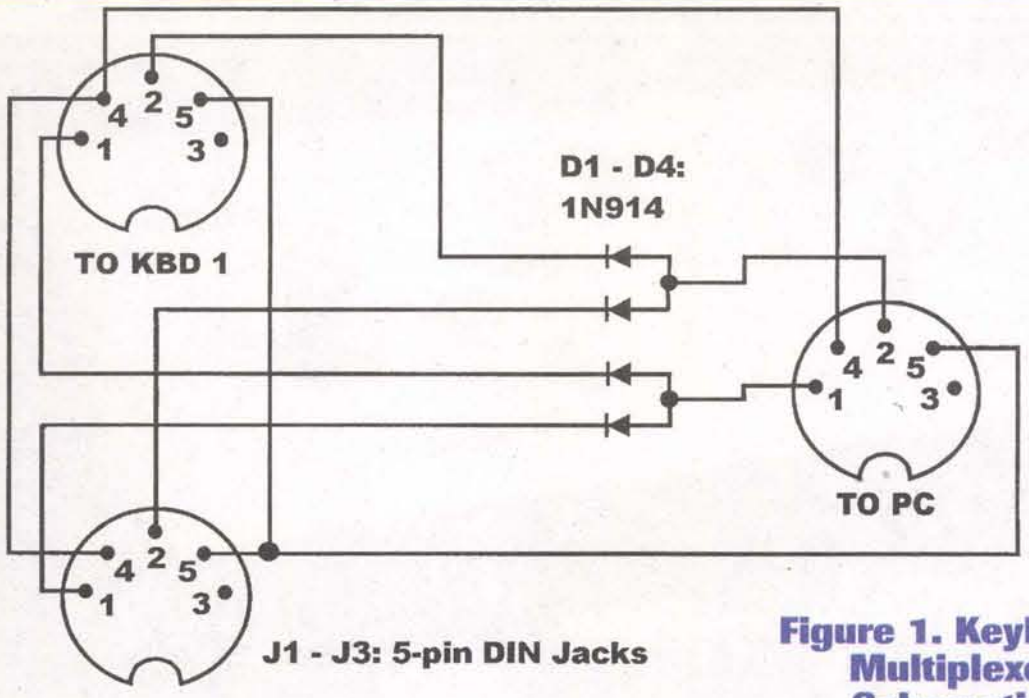


**Figure 1. Keyboard Multiplexer Schematic.**

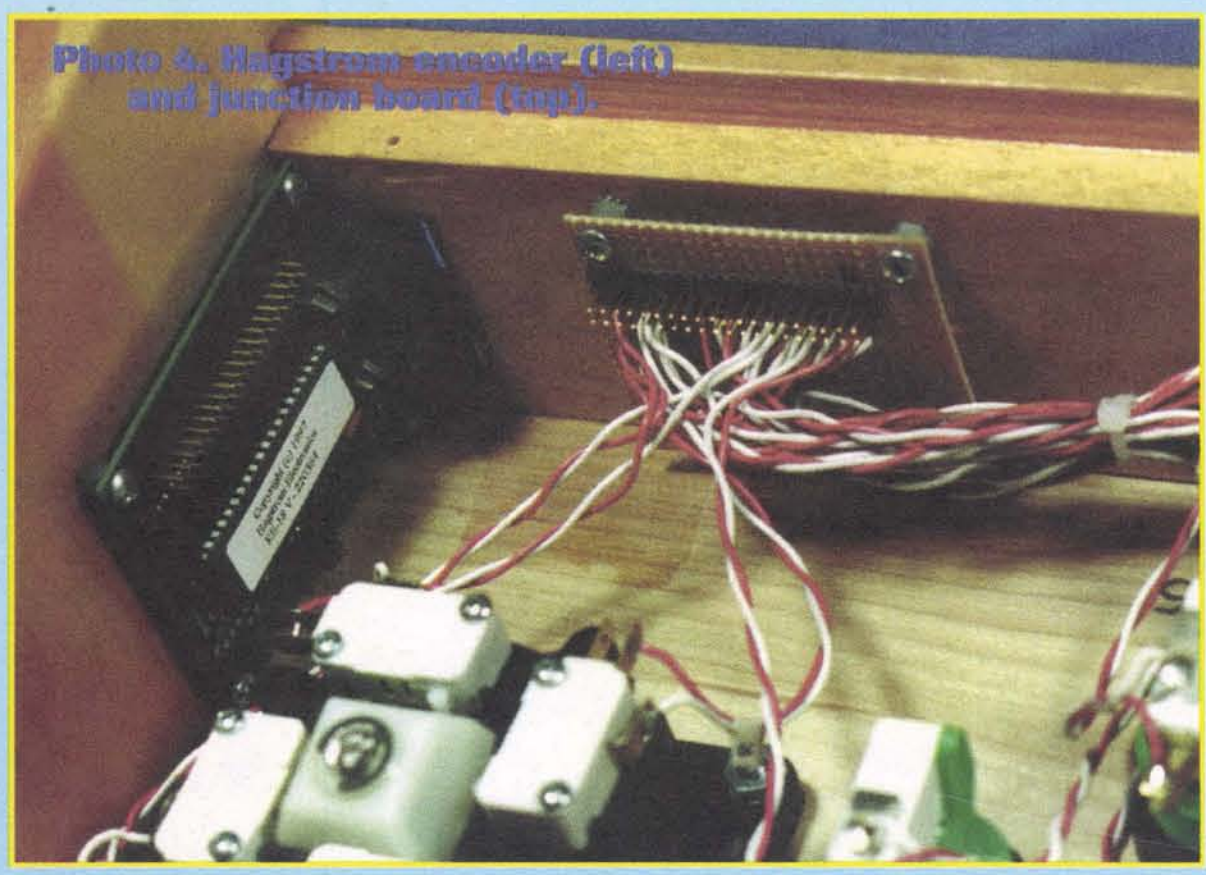

**Photo 4. Hagstrom encoder (left) and junction board (top).**

emulator's hardware requirements are usually spelled out in the documentation.

For PC users, a Pentium 200MMX with 64 MB of RAM and a fast video card are sufficient for most of the older arcade games. You can use less-capable hardware with DOS-based MAME, which is reputed to play games faster than other versions. Under Windows 95 and 98, you can use MAME DOS by booting the PC into DOS mode, or with a front-end like Arcade @ Home. The Windows version — MAME32 — sacrifices some speed but integrates better with the operating system.

## A Simple Controller

Most arcade games are controlled with joysticks, buttons, steering wheels, foot pedals, levers, trackballs, and spinner knobs. Emulators support a limited number of joystick types, but most all of them can use the computer's keyboard. The user customizes the emulator to define keystrokes for certain actions. For example, to go up, you might press the up-arrow key; to fire, you might press the 'F' key. Keyboards are not ideal controllers because of their fragility, but using the keyboard's interface circuitry allows for the creation of a custom controller.

Photos 1 through 3 are pictures of my project. It is built around a Hagstrom Electronics KE18 PC keyboard encoder module. This under-$50.00 part emulates a PC keyboard and receives its power from the host PC. It provides two modes of operation. In one mode, a maximum of 18 different predefined key closures are defined, while matrix mode allows 81 different PC keys to be used.

Table 1 is a list of the keys I used and what functions they control. The KE18 also has a keyboard passthrough, allowing the controller to remain plugged in while you use the keyboard. Hagstrom also makes a version called the KE24, which is completely programmable using your PC's COM port. This makes the controller more usable with emulators that do not allow keyboard remapping, but cost twice as much. The joysticks and switches are genuine arcade-quality units from Happ Controls, a major arcade game parts supplier.

Interfacing the switches and joysticks to the KE18 required a junction board. This simple 2.5" x 2.5" piece of RadioShack solder-ringed hole perfboard duplicates the KE18's 40-pin header connector, and allows simple wire connection and troubleshooting. Photo 4 shows the KE18 and the junction board. The two boards connect with a short length of 40-pin ribbon cable.

Wiring the junction board is straightforward, and begins with the creation of a chart showing the keys you will use with your emulator. You may wish to use my example in Table 1 as-is or create your own. The KE18 supports Control, Shift, and Alt-keypresses like a PC keyboard, but you'll want to use "straight" key assignments for your controller's functions. Next, solder a pair of wires for each key you've defined in the chart across the proper header pins. Label each wire pair with either "Player 1" or "Player 2" and the key name.

## Parts List

- **Hagstrom KE18 Interface with keyboard cable**
- **Happ Ultimate Joystick (2)**
- **Happ Push Buttons and Horizontal Switches (14, various colors)**
- **Happ Coin Reject Buttons (2)**
- **Happ/Cherry Microswitches for Coin Reject Buttons (2)**
- **RadioShack #276-158 perfboard (1)**
- **RadioShack #RSU11323813 40-pin header strip (1)**
- **40-conductor IDE PC hard drive cable (1)**
- **Scrap 18-gauge aluminum for Coin Button brackets**
- **6/32 x 1-1/4" screws with nuts (4)**
- **6/32 x 3/4" screws with nuts (4)**
- **22-gauge stranded hookup wire**
- **Suitable case**

**Table 1. Hey Function Definitions**

| Player 1 Controls | | | Player 2 Controls | | |
|---|---|---|---|---|---|
| Function | Key | Pins | Function | Key | Pins |
| Start | 1 | I - K | Start | 2 | I - L |
| Coin | 3 | I - M | Coin | 4 | H - J |
| Up | R | B - R | Up | U | C - L |
| Down | C | A - L | Down | N | B - N |
| Left | D | A - M | Left | H | A - Q |
| Right | F | A - O | Right | J | B - J |
| Button 1 | E | A - N | Button 1 | Y | C - P |
| Button 2 | T | C - K | Button 2 | I | A - R |
| Button 3 | X | C - O | Button 3 | B | A - K |
| Button 4 | V | C - M | Button 4 | M | B - M |

**Common To Both Players**

| Function | Key | Pins |
|---|---|---|
| Exit Game | ESCape | C - R |
| Select Enter | G - M | |

# Where do I find game ROMs?

ROM download sites can be found all over the Web. Enter any search engine, such as Altavista or Yahoo, and use terms like MAME, emulator, arcade, ROMS, or ROMZ. Add computer-specific names like Amiga and Mac or Macintosh to find emulators for those platforms. Be careful! Some sites may have explicit pornographic banners, and may open multiple instances of your browser that display these sites. It's an unfortunate fact of Internet life that these sites exist, and you're bound to encounter them sooner or later.

Make sure to visit the "Links" section of the sites you visit, as you will find many other resources there that won't appear in the search engines. Bookmark liberally. You'll set up a trail you can retrace later if you find something that catches your eye.

Be prepared to spend a lot of time downloading and updating ROMs. MAME supports over 2,000 different games and, as the program evolves, you may be required to re-download updated ROM sets, as well as new ones. Most classic arcade games are well under one megabyte, while most Neo-Geo games are larger than four megabytes. Some of these games are 30 to 40 megabytes each.

If you don't have an Internet Service Provider (ISP) and can't connect to the Web, stop whining and join the digital age! ISPs typically charge between $15-$30 a month for their service, and allow you to have email, as well as access another great resource called newsgroups. These are similar to the computer BBSes of years past. Groups such as alt.binaries.emulators.misc and comp.sys.emulators have ROM files available for downloading. If you can tolerate an on-screen ad banner, services like Free Altavista provide local, FREE dial-up access to the Internet (Web only, no newsgroups). The no-cost software can be found at altavista.com. Find a net-connected friend and have them download this single-floppy program for you.

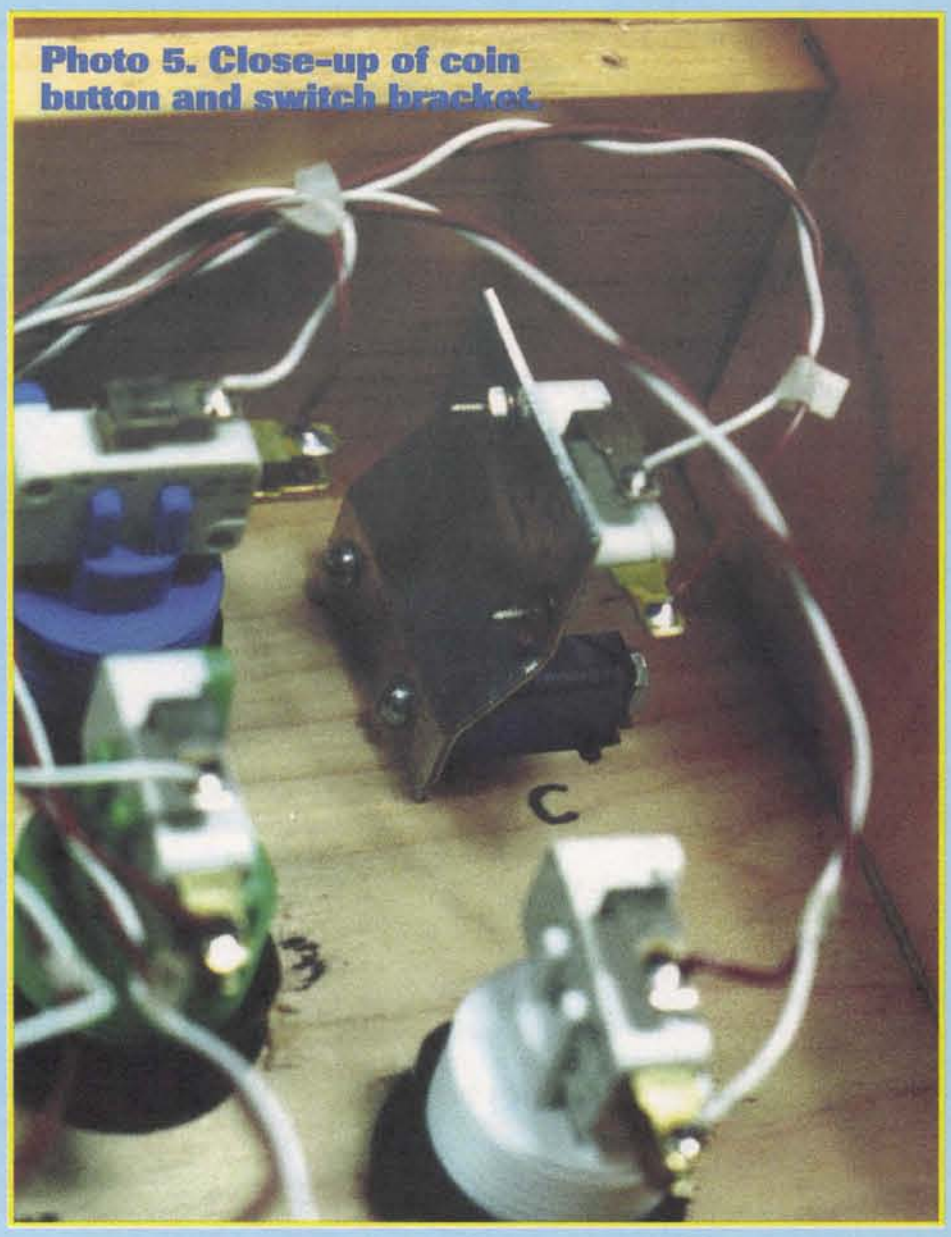

**Photo 5. Close-up of coin button and switch bracket.**

Be mindful of the joystick's switch orientation when connecting wires, because directions are reversed when operating the joystick. When the stick is pushed up, or away from you, the switch closest to you is actually triggered. When the stick is pushed left, the right-hand switch is pressed. If your joystick does not take you in the proper on-screen direction, double-check your wiring. To help keep my wiring straight, I marked the switch functions on the case's inside. This is visible in Photo 3.

One whimsical detail of my controller is shown in Photos 1 and 2. Rather than use standard push-button switches for the 'Coin' functions, I installed two Happ coin-reject buttons. These buttons do not have switches, as they trigger mechanical coin-reject mechanisms. I fabricated simple switch brackets using sturdy pieces of aluminum, and attached a Cherry microswitch to each bracket. Two holes were drilled completely through each bracket and button, and long screws were then used to fasten the two pieces together. This is shown in Photo 5. The bracket also serves to hold the coin-reject button against the front panel. These buttons are not backlit, as the PC's keyboard port doesn't supply enough current for light bulbs.

The controller cabinet measures 23-1/2" wide by 9" deep. It stands 5-1/4" high in the

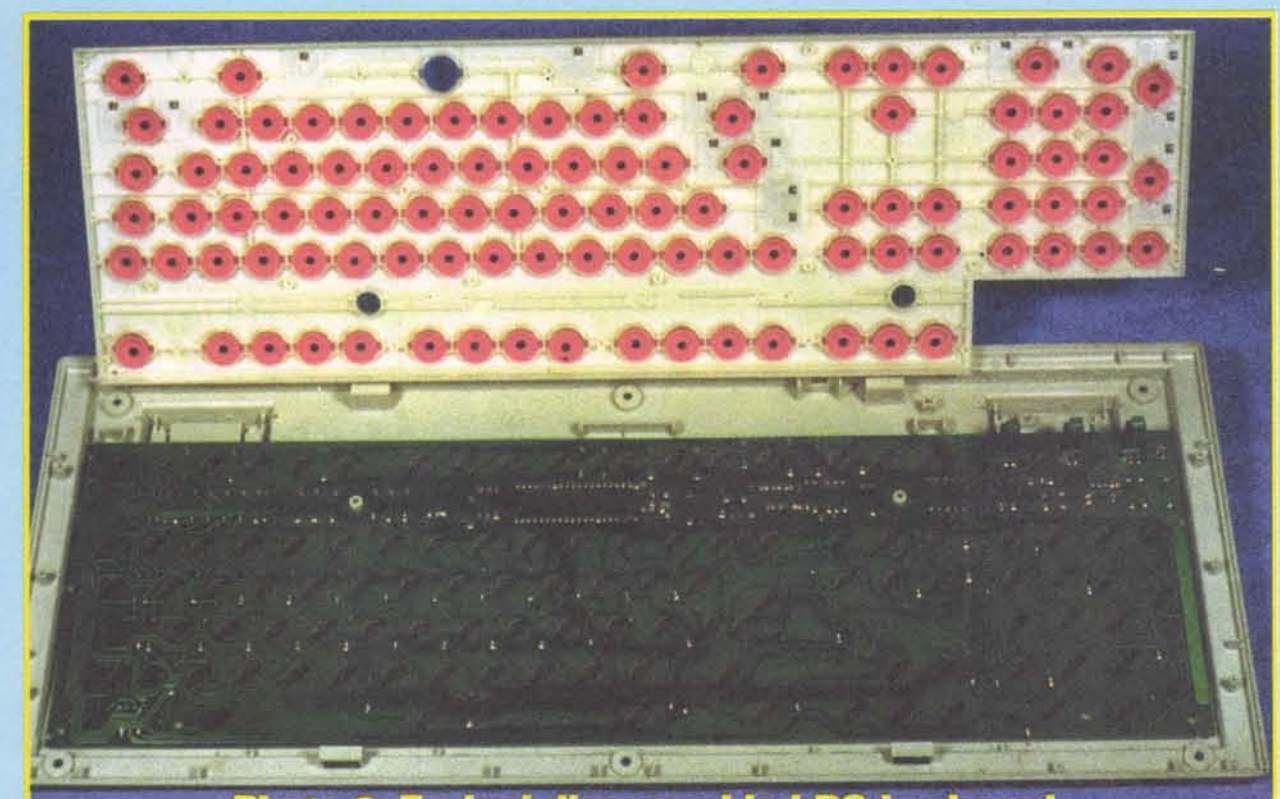

**Photo 6. Typical disassembled PC keyboard.**

back and slopes to 4-1/4" at the front edge. The slope is accomplished by cutting the bottom edges of the controller's end pieces on an angle, with the short side toward the player. The case was built from ¼" scrap plywood and ½" pine boards, and finished with a honey oak stain/polyurethane. The front panel was sized to allow printing of the front panel legends on two 8.5" by 11" pieces of blue card stock, then taping them together.

The front panel and legends are protected by a sheet of 1/8" Plexiglas, with switch holes cut by a machinist friend using a Bridgeport mill. This is why it pays to have contacts with skilled people who can help you with the more difficult areas of your projects. You might also use dry-transfer lettering with several coats of clear enamel over your work.

## Controller Alternatives

If you want to keep costs down, it is possible to gut an existing keyboard and use its controller instead of buying a dedicated controller. PC keyboards can be found at most swap meets for $5.00 or less, or in special sales at your local computer store. Interfacing them to the necessary switches can be accomplished in several ways.

If you disassemble a typical keyboard, you'll see that the key mechanisms are mounted onto a frame that fits over a PC board. Photo 6 shows a disassembled keyboard. This PC board contains many pairs of etched-on contacts, which are shown more clearly in Photo 7. One of the rubber key domes is also shown. When a key is pressed, a conductive pad inside the key dome shorts a pair of contacts on the PC board and makes a key closure.

If you have ample room in your controller case, you can keep the PC board intact and simply solder wires from each switch to each pair of key contacts that you will use. It will be necessary to remove the protective black coating on each set of pads by rubbing them gently with steel wool. After the wires are connected at both ends, you then mount the entire PC board into your controller case. Small-footprint, space saving keyboards work best for this approach.

If you wish to have a neater project, you can use a volt-ohmmeter to trace each key's contacts back to the keyboard encoder IC. Make a list of which pins are shorted when each key is pressed. Then use a bandsaw or jigsaw to carefully separate the keyboard encoder section from the rest of the PC board. Construct a junction board similar to mine, then make an umbilical cord that attaches the junction board to the encoder board.

This approach prevents the simultaneous hookup of a real keyboard; however, adding the simple circuit in Figure 1 should address that shortcoming for PC-based controllers. Gutting a keyboard is the only viable approach for the owners of Amigas and some pre-USB Macintoshes. Other owners of older Macs have another option that I'll discuss in the next section.

My controller works with most arcade games, but some games demand a trackball. For those occasions you can attach a PC trackball to your COM port. By carefully choosing the case style of your trackball, you can mount it directly inside your controller's case. Happ offers a genuine arcade trackball with serial and USB interfaces. While this option is more

**Photo 7. Close-up of PC board and key dome.**

## Companies Referenced

**Hagstrom Electronics**
**Keyboard and USB encoders**
2 Green Lantern Blvd.
Endicott, NY 13760
(607) 786-7523
www.hagstromelectronics.com

**Wico**
**Arcade game parts and controllers.**
7847 North Caldwell Ave., Building C
Niles, IL 60714-4508
1-800-367-9426 or (847) 583-1320
www.wicothesource.com

**Happ Controls**
**Arcade game parts and controllers**
106 Garlisch Drive
Elk Grove, IL 60007
1-888-289-4277 or 1-847-593-6130
www.happcontrols.com

**Fultra**
**This site offers arcade spinners**
www.fultra.com/arcade/

**MCM Electronics**
**Arcade game parts and other items to finish your project**
650 Congress Park Drive
Centerville, Ohio 45459
1-800-543-4330
www.i-mcm.com

expensive, it will be easier to install in a custom case and will hold up well under hard use.

Some games like Tempest and Asteroids are best played with spinner knobs. Until recently, these were not easily obtained. A new company, Fultra, is making them available at a reasonable cost. These units are available with serial interfaces. If you want a USB version, I recommend buying just the mechanism from Fultra, then gutting a cheap USB mouse for its interface.

For games requiring light guns, you can use a console's game gun (such as a Super Nintendo) by constructing a simple parallel-port interface and installing a special DirectX Windows driver called DirectPad Pro.

## Cross-Platform Controller Options

Did you know that you can use a Macintosh keyboard on your PC, and that a Windows-style keyboard can be used on a Macintosh? It's true — if you have a USB port in your computer and a USB keyboard. Using these keyboards to construct your custom controller will allow their use on either platform. There are some caveats.

The PC must have an option in its BIOS to allow "USB Legacy Support" (or other similarly worded phrase). This is necessary because operating systems older than Windows 98 don't recognize that USB keyboards or mice are connected. The USB support in Windows 95 was half-baked and didn't work reliably. Windows 98 is rock-solid in this area and other aspects of its performance. The best thing you can do for your system is to buy a copy of Windows 98 SE, wipe your hard drive, and perform a fresh installation.

You could gut a USB-based keyboard and use its controller. However, a standalone USB controller similar to the Hagstrom unit is available from a British web site. The I-PAC (Interface for PC to Arcade Controls) allows switch interfacing to your computer using the PC-AT (five-pin DIN), PS/2, or USB ports on your PC. Newer Mac users would use the USB port. Owners of older Macs may be able to add a USB controller card and software to use this type of controller. Check with a knowledgeable Mac dealer.

## Who Says You Can't Live In The Past?

Emulators open up a world of fun previously unattainable on your computer. I can now run games from the arcades on my PC, as well as for popular consoles like the Super Nintendo, Sega Genesis, Atari 2600/5200/7800, Intellivision, Playstation, and even the Nintendo 64! The uses for game emulators are limited only by your imagination and wallet.

Have you always wanted an arcade console for your rec room, but didn't want to be stuck with one game forever? Buy a dead arcade machine, gut it, and install a PC with an arcade controller interface. Better yet, buy one of the "cocktail" cabinets that allow two players to sit face to face and use it as a living room coffee table. Have fun with your project! **NV**

Phil Combs is a Computer Systems Administrator for Wright State University in Dayton, OH. You can send any comments or questions to him directly at prc1@ix.netcom.com.

## Web Emulation Resources (or, Where Do I Begin?)

### The Vintage Gaming Network
**www.vintagegaming.com**
A great source for gaming and computer emulation.

### Arcade @ Home
**www.arcadeathome.com**
This site offers gaming resources and the best Windows-based GUI for DOS MAME called Arcade @ Home.

### RomCenter
**www.emuhq.com/romcenter/**
The home of the best ROM management utility I know of. You need this program to maintain your ROM collection.

### Build Your Own Arcade Controller FAQ
**www.arcadecontrols.speedhost.com/arcade.htm**
This site offers lots of info on building your own controller and retrofitting old arcade cabinets.

### Andy's Arcade Site
**www.spaceinvaders.uk.com**
This site features the IPAC interface, as well as instructions for integrating it into your project.

### DirectPad Pro
**www.ziplabel.com/dpadpro/index.html**
You can download the DirectX console controller driver and interface details here. Look around — they may have some other software you never knew you needed!

# NEW WEB SITE

Have you visited the *Nuts & Volts* web site lately? If not, you'll be surprised to learn that there are big changes happening. In fact, the whole site is being redesigned with new features and a new look.

I know, you say "But I've heard that before and I'm still waiting." This time it's different ... no really! Now, Greg over at Image 2020 has been working day and night to bring new features online. In fact, he has already upgraded our search engine (the old one *REALLY* sucked – thanks to everyone that pointed that out!) so you can find the articles you're looking for. He's also got the long-awaited discussion board up and running, and even now is working on the new look and more cool stuff.

Now's your chance to get in on the fun, and help with the redesign, by telling us what you want to see at the *Nuts & Volts* web site. Sure, we have our own ideas, but if you don't let us know yours, then you don't get to whine if you don't like it.

So, check it out at **www.nutsvolts.com** and try out the new discussion forum and search engine. Come back often to see what's new and watch the development. Don't forget to send your requests/comments/complaints to webmaster@nutsvolts.com or click the link on the opening page.

The finished site should be completed in a couple of months, however, all the new stuff, as well as the old, will remain functional during the upgrade.

*It's gonna be great!*

by Tim Deagan

# PROSTHETIC SARCASM WITH EMOTICONS FOR SPEECH

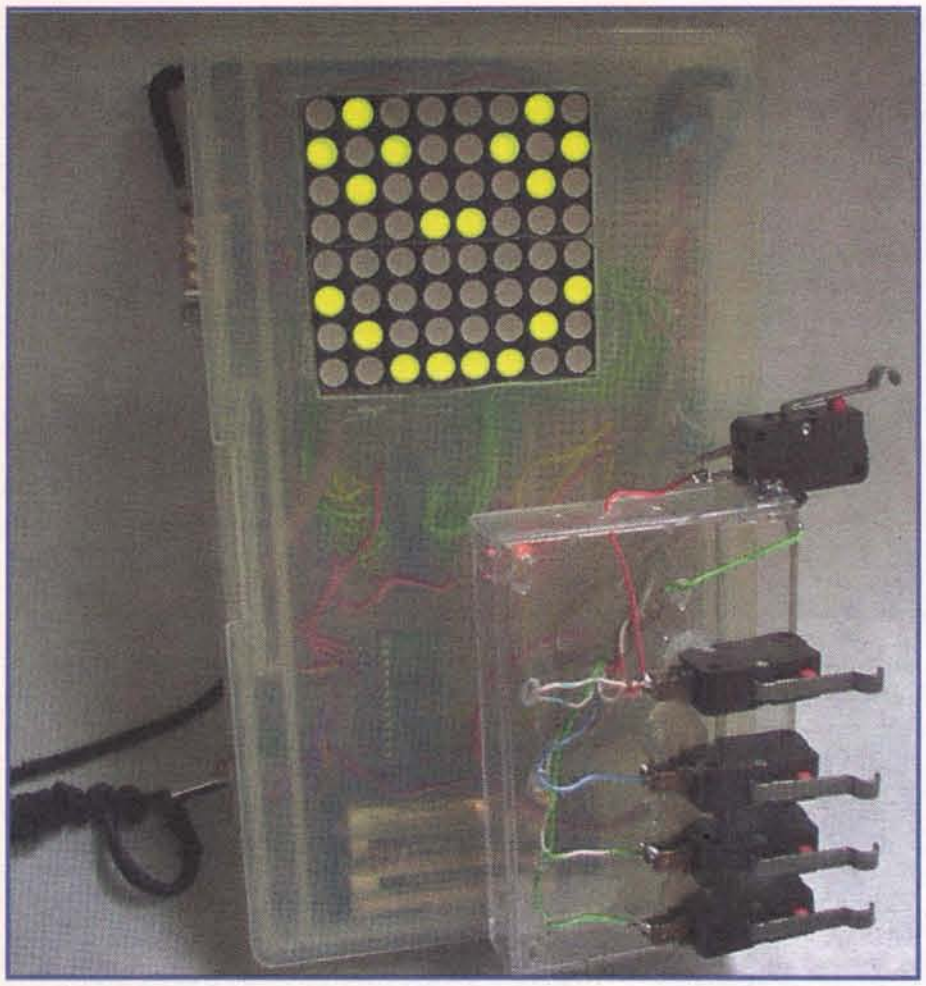

**A front view of the Iconizer.**

How many times has a smiley face :-) in computer text kept you from taking offense at some statement? These emoticons provide important cues within digital communications. Yet, the same problems crop up in face-to-face communication, as well.

What's a clever microcontroller enthusiast supposed to do, live with it? Not any more.

Enter the Iconizer, a prosthetic for those of us who don't manage to pull off sarcasm, irony, and other non-verbal communications.

The Iconizer uses a BASIC Stamp II (BS2) and MAX7219 to display animated 8x8 icons on an LED grid. A simple chord keyboard allows the wearer an easy one-handed means for sending graphic or text messages to recipients standing nearby or across a nightclub. A serial port accepts system reprogramming and provides project expansion capabilities. In the spirit of simplicity, the whole project can be assembled in two hours. Let's take a look at what makes this gadget work.

## The Hardware

The display is the most obvious part of the project. Two 4x8 LED grid arrays are mounted side by side to provide an 8x8 pixel 'screen.' This may seem a tad overboard in the direction of 'low-res,' but you'll be surprised what can be accomplished in this small an area. Before there were True-Type Fonts, amazing things were being done in the tiny space allotted to characters in DOS. The challenge of expressing yourself with icons in this small mode can be a lot of the fun in this project.

I'm using two LTP-23458AA-NB displays from Lite-On. They measure 8x8 as a pair, providing a large display surface. These displays use bi-color LEDs (Red/Green, together producing Orange.) As the project is currently set up, I'm only using the green LEDs. Together, these displays provide 16 pins — eight cathode and eight anode — as the means to control the 64 LEDs. Other LED matrix displays will work fine, though a single MAX7219 is only capable of driving a total of 64 LEDs.

I have to confess that in many respects, this project is an excuse to work with the MAX7219 chip from Maxim. This chip is a real boon to microcontroller developers. Originally designed to drive eight seven-segment LED displays from a serial input, it has a host of other uses, as well. Since the MAX7219 is designed to handle the decimal point present on most seven-segment LED displays, its full capacity is 8x8 or 64 LEDs. It drives these LEDs without the need for biasing resistors. This makes for easy hookup and simple designs. Special internal functions provide for dimming and selective update.

The data sheet also makes clear how to use this chip with 8x8 grid arrays instead of LED numeric displays. This makes the chip immediately useful for easily controlling 64 outputs with a simple serial connection. These chips can even be cascaded for controlling bigger displays.

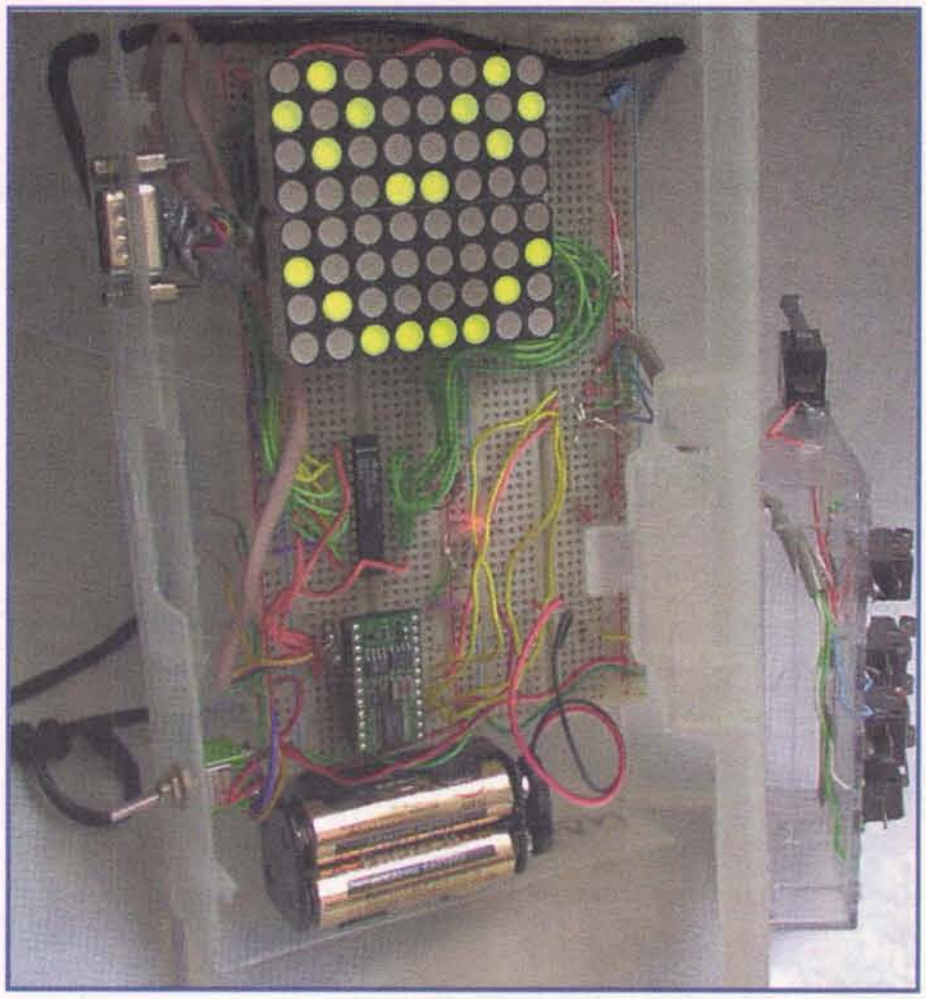

**A view of the Iconizer internals.**

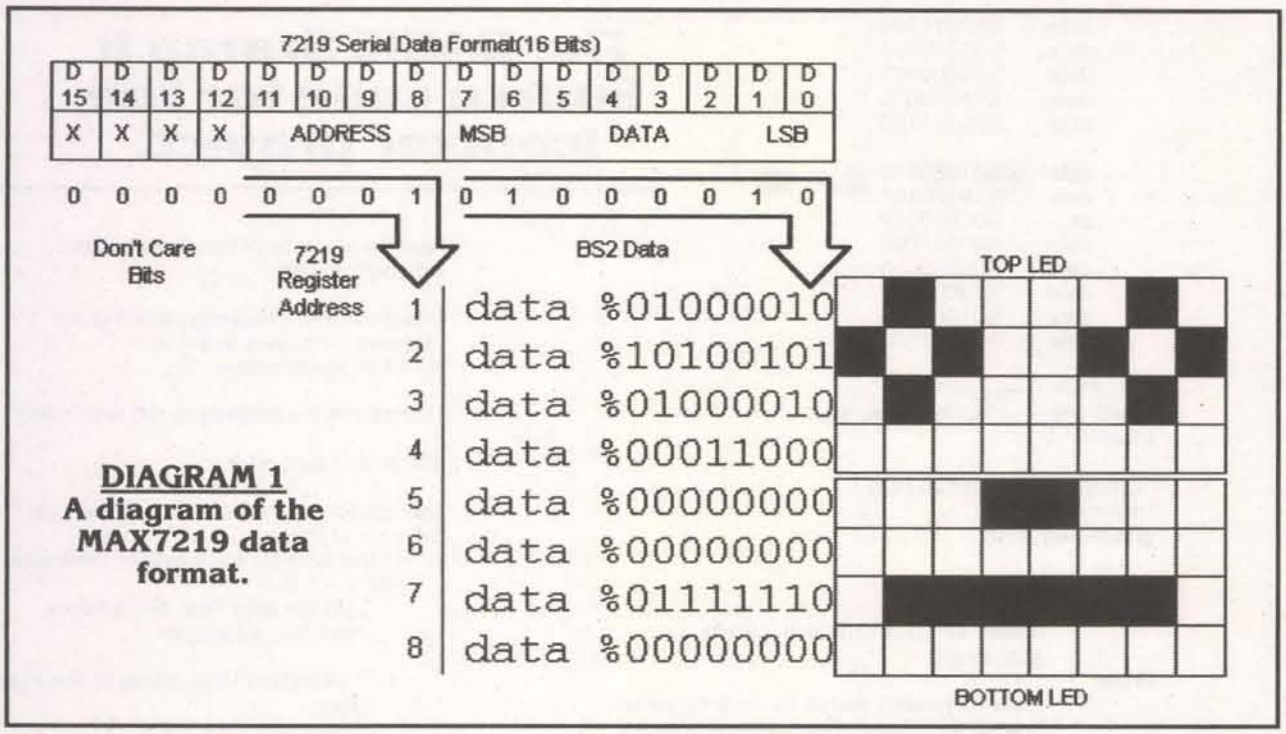


**DIAGRAM 1**
**A diagram of the MAX7219 data format.**

The BS2 from Parallax is a great workhorse of a project microcontroller. As many new alternatives as I try, I keep coming back to the BS2. It's powerful, easy, and fun. Programmed in a surprisingly powerful BASIC variant, all the commands and memory space I need are a breeze to use. Using the BS2's serial port to connect to the PC for programming is a snap. There is a sizable amount of free code on the Internet for the BS2 and an avid developer community. All in all, I find that using the BS2 is a fast and enjoyable way to prototype projects. I often intend to later redo the project on a different architecture and never find a need (other than cost.)

Input to the system is through one of my favorite peripherals, the chord keyboard. Five momentary contact switches are arranged for thumb and fingers. Using the thumb switch as 'ON' and using all four fingers up (0000) as 'BLANK,' 15 icons are possible as combinations of the finger switches. Simply press the desired arrangement of finger switches and then hit the thumb switch to display the chosen icon. Simple pull-up resistors assure clean operation with the BS2. I mounted the five switches onto a plastic 8mm cassette case using hot melt glue.

This project uses a breadboard for circuit assembly. Two modular sections are joined together, providing an ample working area. These two sections fit nicely into a VHS cassette tape case, leaving room at the bottom for batteries. Choose a VHS case that either has no bumps for positioning the spools of the cassette itself, or use a hobby knife to trim them off.

Additional cuts can easily be made in the case to provide mounting for the power switch, serial port, and chord keyboard wires. Small holes can easily be made by heating a piece of coathanger or other wire and plunging it through the case; be careful to do this in a well ventilated environment.

The power supply is a set of four AA batteries providing 6VDC. This is within the operating parameters of the MAX7219 and the BASIC Stamp's unregulated input voltage, so the project manages to work without any additional voltage regulation. A simple 1uF decoupling capacitor between the positive and negative rails of the power bus helps keep the noise low on the power supply bus. Increased noise suppression could be gained by adding a .1uF cap across power and ground, as well.

It's easy to assemble this project on the breadboard before putting it into the case. There is plenty of spare room even with the space requirements of the LEDs. It's really worth the time and effort to solder a couple of simple reusable parts. The SPST power switch and the nine-pin serial port are incredibly useful if you solder some wires to them in advance. Almost any solid core wire will do (as long as it will fit into the breadboard holes when stripped.)

I like to use six-conductor telephone wire; you can either remove

## PARTS

1 - BASIC Stamp II
1 - MAX7219CNG (Digi-Key MAX7219CNG-ND)
2 - 4x8 LED arrays (See note below)
5 - momentary contact switches
1 - SPST switch (RS# 275-634)
1 - 9-pin D-sub male serial connector (RS# 276-1537)
1 - 4-AA battery holder w/ snap connection (RS# 270-383)
1 - 9V snap connector (RS# 270-324)
2 - 6" modular breadboard sockets (RS# 276-174)
4 - 8-pin wire-wrap SIP sockets
1 - 4-pin wire-wrap SIP socket
1 - 24-pin wire-wrap DIP socket
1 - 1uF capacitor
6 - 2.2K ohm resistors
1 - VHS cassette case
1 - 8mm or VHS-C cassette case
4 - AA batteries
hookup wire
Some kind of light neck strap

Note: As of the printing of this article, 4x8 LED matrix arrays have become very difficult to find. Digi-Key carries a 5x8 matrix array from Lite-On (MFG Part# LTP-2158AHR, Digi-Key Part# 160-1014-ND). With a little care in the hookup, this is a workable replacement for the 4x8 matrix. You could even drive the extra LEDs directly from the BASIC Stamp II for extra fun!

Tim Deagan KC5QFG is an Information Ecologist and Python Advocate in Austin, TX. He loves to take things apart. He can be reached via email at tdeagan@fc.net.

Mr. NiCd
OCTOBER 2000 SUPER SPECIALS!
THE BEST BATTERIES IN AMERICA!

*Packs & Charger for YAESU FT-50R / 40R / 10R:*
FNB-40xh Slim-NiMH 7.2v 650mAh $41.95
FNB-47xh (NiMH) 7.2v 1800mAh $49.95
FNB-41xh (5w NiMH) 9.6v 1000mAh $49.95
*For YAESU FT-51R / 41R / 11R:*
FNB-38 pack (5W) 9.6v 700mAh $39.95
*For YAESU FT-530 / 416 / 816 / 76 / 26:*
FNB-26 pack (NiMH) 7.2v 1500mAh $32.95
FNB-27s (5w NiMH) 12.0v 1000mAh $45.95
*For YAESU FT-411 / 470 / 73 / 33 / 23:*
FNB-11 pack (5w) 12.0v 600mAh $24.95
FBA-10 6-Cell AA case $14.95
*Packs for ALINCO DJ-580 / 582 / 180 radios:*
EBP-20ns pack 7.2v 1500mAh $29.95
EBP-22nh pk.(5w) 12.0v 1000mAh $36.95
EDH-11 6-Cell AA case $14.95
*For ICOM IC-Z1A / T22-42A / W31- 32A / T7A:*
BP-180xh pk. (NiMH) 7.2v 1000mAh $39.95
BP-173 pack (5w) 9.6v 700mAh $49.95
*For ICOM IC-W21A / 2GXAT / V21AT:(Black or Gray)*
BP-132s (5w NiMH) 12.0v 1500mAh $49.95

*For ICOM IC-2SAT / W2A / 3SAT / 4SAT etc:*
BP-83 pack 7.2v 600mAh $23.95
*For ICOM 02AT etc & Radio Shack HTX-202 / 404:*
BP-8h pack 8.4v 1400mAh $32.95
BP-202s pack (HTX-202) 7.2v 1400mAh $29.95
*For KENWOOD TH-79A / 42A / 22A:*
PB-32xh pack (NiMH) 6.0v 1000mAh $29.95
PB-34xh pack (5w NiMH) 9.6v 1000mAh $39.95
*For KENWOOD TH-78 / 48 / 28 / 27:*
PB-13 (original size!) 7.2v 700mAh $26.95
*For KENWOOD TH-77, 75, 55, 46, 45, 26, 25:*
PB-6x (NiMH, w/chg plug!) 7.2v 1200mAh $34.95

Mail, phone, & Fax orders welcome! Pay with Mastercard / VISA / DISCOVER / American Express
Call 608-831-3443 / Fax 608-831-1082
Mr. NiCd - *E. H. Yost & Company*
2211-D Parview Road, Middleton, WI 53562
CALL OR WRITE FOR OUR FREE CATALOG!
Cellular / Laptop / Videocam / Commercial & Aviation packs too!
E-mail: ehyost@midplains.net

HOT NEW PRODUCTS!!!

Phone Manager - Reverse Caller ID. Now you can keep track of outgoing numbers. Records length, time and date of call. Keep track of the children, the wife, or the phone company. Easy hookup via phone jack.
New low price $79.95

Phone and Internet Voice Changer - This device is new to the market and provides realistic sounding voices. It allows you to interface directly to your phone jack, or computer via patch cord and mic.
Intro price $129.95

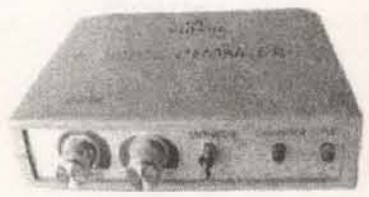

Order directly from our website at www.electronickits.com
We also have over 200 Electronic Plans, Kits and Spy Products
Carl's Electronics Inc. sales@electronickits.com

Write in 141 on Reader Service Card.

# The BASIC Stamp II Source code for the Iconizer project.

```
' Time between each frame of the icon
frm_pause       con     75

' Time icon should wait after last frame
icon_pause      con     1000

' 7219 setup register values
decode_reg      con     $0900
intensity       con     $0a0a
scan_limit      con     $0b07
shutdown_on     con     $0c01
shutdown_off    con     $0c00
test_off        con     $0f00
test_on         con     $0f01

' Pin alias's
load            con     0
clk             con     1
dout            con     2

' Application variables
frm_addr        var     word
x               var     byte
x_val           var     byte
y               var     byte
frames          var     byte
frm             var     word
icon            var     word
btnwrk          var     byte

'------ SETUP FRAMES ------
blank   data    1

        data    %00000000
        data    %00000000
        data    %00000000
        data    %00000000
        data    %00000000
        data    %00000000
        data    %00000000
        data    %00000000

smile   data    7

        data    %01000010
        data    %10100101
        data    %01000010
        data    %00011000
        data    %00000000
        data    %00000000
        data    %01111110
        data    %00000000

        data    %01000010
        data    %10100101
        data    %01000010
        data    %00011000
        data    %00000000
        data    %00000000
        data    %01111110
        data    %00000000

        data    %01000010
        data    %10100101
        data    %01000010
        data    %00011000
        data    %00000000
        data    %01000010
        data    %00111100
        data    %00000000

        data    %01000010
        data    %10100101
        data    %01000010
        data    %00011000
        data    %00000000
        data    %10000001
        data    %01000010
        data    %00111100

        data    %01000000
        data    %10100111
        data    %01000000
        data    %00011000
        data    %00000000
        data    %10000001
        data    %01000010
        data    %00111100

        data    %01000000
        data    %10100111
        data    %01000000
        data    %00011000
        data    %00000000
        data    %10000001
        data    %01000010
        data    %00111100

'--- Main ---------
gosub init      'do the setup stuff
btnwrk = 0

' Launch initial startup icon
icon = smile
gosub play_icon

' Main loop
looper:
        button 12,1,1,250,btnwrk,1,Press
        goto looper
Press:
        ' this command should be on a single line
        branch INC, [oooo,xooo,oxoo,xxoo,ooxo,
        xoxo,oxxo,xxxo,ooox,xoox,oxox, xxox,ooxx,
        xoxx,oxxx,xxxx]

' easy map of button presses to icon displayed
' o - switch open
' x - switch closed
' replace the word "blank" with the name of the icon
' that you want displayed for that button combination
oooo:
        icon = blank
        goto play_icon
xooo:
        icon = smile
        goto play_icon
oxoo:
        icon = blank
        goto play_icon
xxoo:
        icon = blank
        goto play_icon
ooxo:
        icon = blank
        goto play_icon
xoxo:
        icon = blank
        goto play_icon
oxxo:
        icon = blank
        goto play_icon
xxxo:
        icon = blank
        goto play_icon
ooox:
        icon = blank
        goto play_icon
xoox:
        icon = blank
        goto play_icon
oxox:
        icon = blank
        goto play_icon
xxox:
        icon = blank
        goto play_icon
ooxx:
        icon = blank
        goto play_icon
xoxx:
        icon = blank
        goto play_icon
oxxx:
        icon = blank
        goto play_icon
xxxx:
        icon = blank
        goto play_icon

end

'--- play icon ------
play_icon:
        ' get the address of the chosen icon
        frm_addr = icon

        ' read the first icon entry, which is the
        ' number of frames in the icon
        read frm_addr,frames

        ' increment the address to the first frame
byte
        frm_addr = frm_addr + 1

        ' do this loop for each frame of the icon
        for x = 1 to frames
          ' do this loop for each byte in the frame
            for y = 1 to 8
              ' get the data from this address
              read frm_addr,x_val

              ' increment the address to the next
              ' byte
              frm_addr = frm_addr + 1

              ' get the 7219 call setup with the
              ' address (y * 256) and the data
(x_val)
              frm = y*256+x_val
              gosub load_reg    ' go load the
7219
            next
            pause frm_pause     ' pause after
                                ' frame
        next
        pause icon_pause        ' pause after
                                ' icon
        ' return to the main loop
        goto looper

'--- Load 7219 register ------
load_reg:

        low load
        ' push out the 7219 data a bit at a time,
        ' msb first
        shiftout dout,clk,1,[frm\16]
        high load

return

'------ Initialize  BS2 & 7219 ------
Init:
        ' setup input/output pins
        DIRS = %0000000000000111
        x_val = 0

        ' pass the 7219 all it's setup values
        for x = 1 to 8
                frm = x*256
                gosub load_reg
        next

        frm = decode_reg        ' set to bits not
                                ' characters
        gosub load_reg

        frm = intensity         ' set the
                                ' brightness
        gosub load_reg

        frm = scan_limit        ' set number of
                                ' data registers
        gosub load_reg

        frm = test_off          ' set display test
                                ' to off
        gosub load_reg

        frm = shutdown_on       ' set to all LEDs
                                ' off
        gosub load_reg

return
```

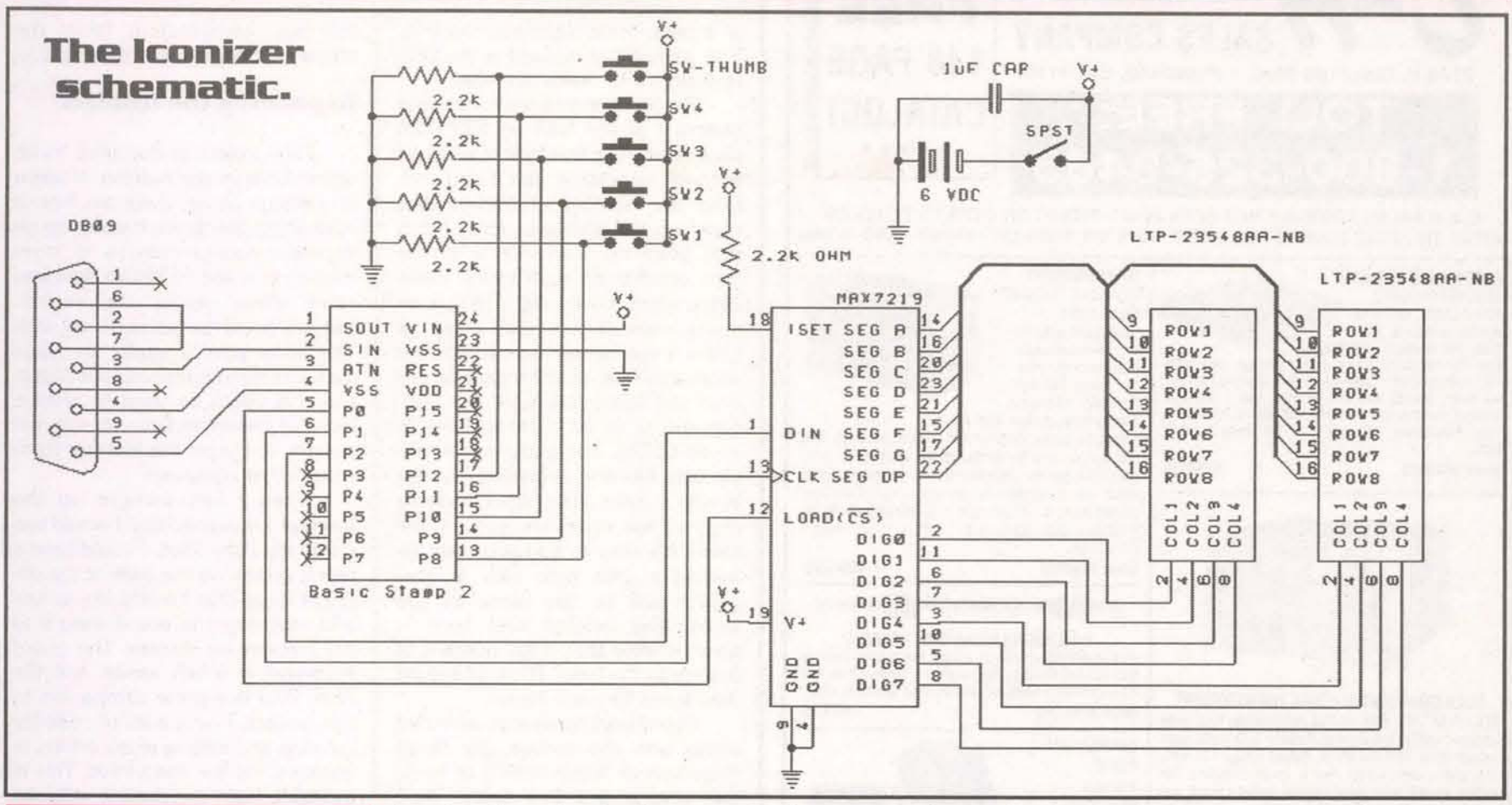
The Iconizer schematic.



## RESOURCES

7219 Data sheet location: http://209.1.238.250/arpdf/1339.pdf

BASIC Stamp 2 manual and info location: http://www.parallaxinc.com

A great BASIC Stamp II info site: http://www.phanderson.com/stamp/

Project source code location: http://www.fc.net/~tdeagan/inconizer

the wires from the sheath or you can leave them bundled within it. I also find that the BS2 will survive many breadboard projects if you stick it in a 24-pin wire-wrap socket. I mounted the LED arrays on wire-wrap SIP sockets so that I could route wires underneath them. This also assures that the displays will stand up at the level of the case cover.

I really like my projects to look like technology from a Mad Max movie. I don't go out of my way to trim the breadboard leads or route them extra carefully. I'm not shy about stringy hot melt glue or pieces of duct tape. Since the tolerances on this project are pretty loose, it's a matter of preference. On many projects, the assembly style can make the difference between working and failing, so use judgment on how sloppy you can afford to be.

### The Software

This project is so simple because of the built-in functionality of the MAX7219. As with any new chip you want to explore, don't hesitate about getting the data sheet (see resource sidebar.) A simple three-wire interface makes it easy to communicate with the BS2. First the Chip Select (pin 12) is pulled low, and then each rising edge of the Clock (pin 13) reads in a bit on Data In (pin 1.) Data is sent to the MAX7219 in 16-bit blocks which include a register address and a value (see Diagram 1.)

The software sends a few setup values to the chip, then sends it address/data words (two bytes) to define which LEDs to light. These values are sent to the 7219 one bit


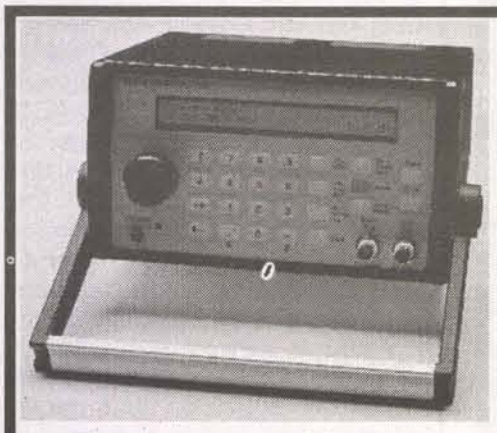

Telulex model SG-100A

New Features:
✔ 21.5 MHz
✔ .01 Hz steps
✔ multi-unit phaselock

BNC/Telulex Div.

Any waveform you want!

● Synthesized Signal Generator
Clean sinewaves DC-21.5 MHz with .001% accuracy! .01 Hz steps. DC Offset. RS232 remote control.

● Arbitrary Waveform Generator
40 Megasamples/Second. 32,768 points. 12 bit DAC

● Function Generator
Ramps, Triangles, Exponentials, Noise & more. 0 to 2 MHz in 1 Hz steps. Continuous or Triggered.

● Pulse Generator
Digital waveforms with adjustable duty cycle

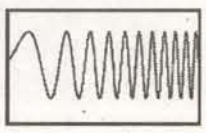
DC to 21.5 MHz linear and log sweeps

Int/Ext AM, SSB, Dualtone Gen.

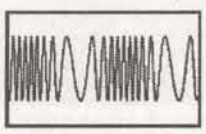
Int/Ext FM, PM, BPSK, Burst

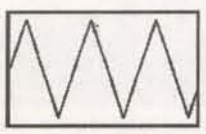
Ramps, Triangles, Exponentials

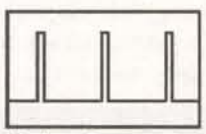
Pulse Generator

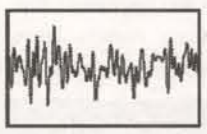
Noise

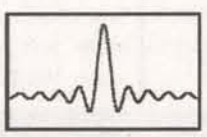
Arbitrary Waveforms

Unlimited Possibilities!

3060 Kerner Blvd., #2
San Rafael, CA 94901

Tel (415) 453-9955
Fax (415) 453-9956

http://www.Telulex.com
Email: sales@Telulex.com

Write in 142 on Reader Service Card.

VISIT US ON THE WEB AT:
http://www.candhsales.com
email: candhsales@earthlink.net

C and H SALES COMPANY
2176 E. Colorado Blvd. • Pasadena, CA 91107

TOLL FREE:
1-800-325-9465

FREE 148 PAGE CATALOG!

C & H SALES COMPANY HAS BEEN IN BUSINESS FOR OVER FIFTY YEARS.
WE'RE THE BEST SOURCE FOR GREAT BUYS ON ITEMS LIKE THESE - AND MORE!

**ELECTRONIC COUNTER**
HEWLETT PACKARD, Model 5328A. Universal counter. Usable to 100 MHz, 100 ns single shot resolution. Has frequency, period, period average, ratio, totalize, scale functions. Two input channels provide individual slope, polarity and level settings. Has 9 digit LED readout. Input power 100–240 VAC 48–66 Hz 100 VA max. Dimensions: 17" wide x 17-1/4" deep x 3-1/2" high.
Stock #TE9808 $250.00

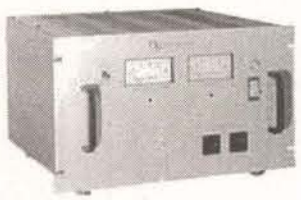

**SOLA CONSTANT VOLTAGE TRANSFORMER**
SOLA ELECTRIC, #93-13-150. Harmonically neutralized constant voltage transformer. Rated at 500 watts. Input voltage 95 to 130 VAC 60 Hz. Output voltage 120 VAC. This unit is designed for rack or bench mounting. The meters on the front panel indicate output current and input/output voltage. A toggle switch is provided for selection of input or output voltage. The input voltage is connected at the rear of the unit via a covered electrical panel. Two standard 3-wire grounded electrical outputs are supplied on the front and rear panels. Dimensions: 19" wide x 14-1/4" high x 10-1/4" deep. Weight 59 lbs.
Stock #STR9900 $225.00

**MILLIOHMETER**
HEWLETT PACKARD, Model 4328A. Designed to measure very low resistances. Measurement range 1m ohm to 100 ohms. Resolution 20 u ohms. Analog meter readout. Ideal for measuring contact resistance of switches or relays. This unit is also useful for measuring the resistivity of semiconductor devices. (Requires special 4 terminal probes which are not supplied, but probably are available from Hewlett Packard.) Power input: 115–230 VAC 48–66 Hz, 5 VA max. Dimensions: 5-1/8" wide x 11-1/2" deep x 6-1/2" high.
Stock #TE9812 $200.00

**PRECISION LINEAR WAY BEARING**
This assembly consists of a linear ball bearing track rail and two ball bearing slider elements. 280mm long with 14 countersunk holes for rail mounting. Stainless steel.
Stock #BR2002 $57.50

**DIAPHRAGM PUMP**
THOMAS INDUSTRIES Single diaphragm oil-less pump. Motor rated 115 VAC 60 Hz. Pump output is 0.69 cfm free air. Max. continuous operating pressure 20 psi.
Stock #PC9904 $49.50

☑ Master Charge ☑ Visa ☑ American Express ☑ Discover

Call us first if you have surplus inventories of electronic, optical, or mechanical items for disposal

WE BUY & SELL!

Write in 140 on Reader Service Card.

Use your PC as a scope and datalogger!

PC-based Instruments!

Parallel Port Scope
spectrum analyzer, and digital multimeter

**ADC Virtual Instruments** turn your PC or laptop into a sophisticated storage scope AND spectrum analyzer AND multimeter. Display simultaneously on large screen! 100MS/s 8-bit or 1.2MS/s 12-bit or 333kS/s versions. Great for schools, test depts, etc. Input to Excel! LabView/NT drivers included.

Environmental Logging
record temperature, humidity, etc.

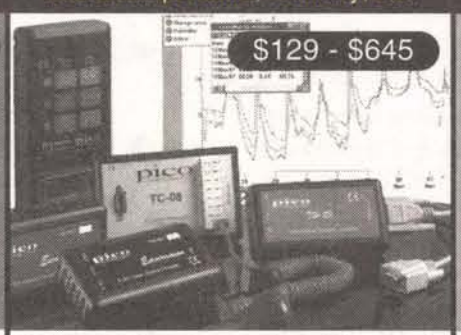


**ENVIROMON** - temperature (thermistor), humidity & light sensors, door position, etc. Record for 365/24 without a PC even if power fails. Monitor 30 sensors 400 yds away. With cables and easy software. Remote audio alarm. Use **TC-08** for most thermocouples.

osziFOX
20MS/s handheld scope

**osziFOX** - handheld storage scope and DVM - stand-alone or plugs into your PC for display, store-to-disk, printing in color. Inputs to 100V, trigger, backlit LCD.

Download FREE demo software. Sales only: 1-888-7SAELIG
www.saelig.com 716-425-3753 • -3835 (fax) saelig@aol.com

pico Technology Limited ®

Stocked in NY by Saelig Company: Virtual Instruments, I2C and embedded controllers, BITlink 2-wire networks, RS232/422/485, frame grabbers, etc. See www.saelig.com for Product of the Month!

Write in 143 on Reader Service Card.

:) ;) :( :) ;) :( :) ;) :(

at a time, most significant bit first. The 'shiftout' command of the BS2 is designed to make this easy.

The icons are stored in the data memory of the BS2 as EEPROM data bytes. The first byte stored has a name associated with it and contains the number of frames that make up the animated icon. From that point on, each frame in the icon consists of eight bytes. Eight bytes, each having eight bits, is an exact map of our 8x8 array of LEDs. I use binary notation in the source code so that it's easy to see what the frame will look like (picture the 1s as on LEDs and the 0s as off LEDs). The code in this article only has one animated icon for brevity's sake. The downloadable copy of the code has quite a few more. It's easy to add your own by adding a data byte with a label (which will be the name of the icon). The labeled data byte is given a value that is the number of frames in the icon. Then add eight data bytes for each frame.

Chord keyboards were invented along with the mouse (by Doug Engelbart at Xerox PARC) to facilitate one-handed text entry. We'll use our chord keyboard to input which icon to display. The BS2 'button' command will test to see if the thumb key is pressed. If it is, then we test the value of the third nibble (four bits) of the input pins, referred to as 'INC' by the BS2. The value of these four pins redirects us to one of 16 locations. I have given the labels associated with these locations names made up to represent the key combination from the chord keyboard (oxoo, oxxo, etc.).

## Expanding the Iconizer

This project is designed to be expandable in any number of ways. In software alone, there are lots of interesting directions. It would be an excellent coding exercise to store messages in the EEPROM data and scroll them across the screen. Images could be scrolled, as well. The serial port is useful for more than just reprogramming the BS2 in place, it could be used to receive icons or messages from an external source, or trigger the Iconizer from some other computer.

When I first thought up the Iconizer, I imagined that I would use it with my Palm Pilot. I would have a touch screen on the pilot of the different icons that I might like to use and touching one would send it to the Iconizer for display. The chord keyboard is much easier, but the Palm Pilot is a great companion to this project. I have a lot of code for creating and editing icons written in Pocket C for the Palm Pilot. This is available from the project web site as well.

Adding a second MAX7219 creates a lot of neat opportunities. More LED arrays could be added. Or, somewhat more interesting is the idea of taking advantage of the fact that many LED displays (at least the ones I bought), are dual color. There is a red and green LED in each location, combined they even make yellow! A second MAX7219 could be used to drive the red LEDs and create some really exciting icons.

The MAX7219 deserves an additional minute to cover some of its other uses. This chip was initially intended to drive seven-segment LED numeric displays and has an internal setting which will allow it to accept numbers as seven-segment LED display data. The MAX7219 will then do the decoding to light up the correct LED segments to display the passed number. In the straight binary mode the Iconizer uses, the MAX7219 can drive small relays, or with the addition of transistors or other drivers, it could control almost anything with a digital input. It's a quick and easy 64-bit digital out expansion for a microcontroller. All of this and more is covered in the data sheet. It takes a little while to get used to wading through the information in data sheets, but it's worth the effort.

Whether you're giving a digital wink to someone across a crowded bar, or an LED thumbs down to someone speaking on stage, the Iconizer lends you all the incredible power of ASCII graphics and more. ;-) **NV**

# A Compact Laptop & GPS Will Change Your Life!

**Netcom** #1 in Customer Service Since 1983

## Satellite GPS Navigation?

## We've got you covered

**IBM ROAD WARRIOR**
*Professional Road Equipment*

*for professional use*

**USE IN DIRECT SUNLIGHT**

4 easy payments of $199.99
0% Financing!
On Credit Cards only

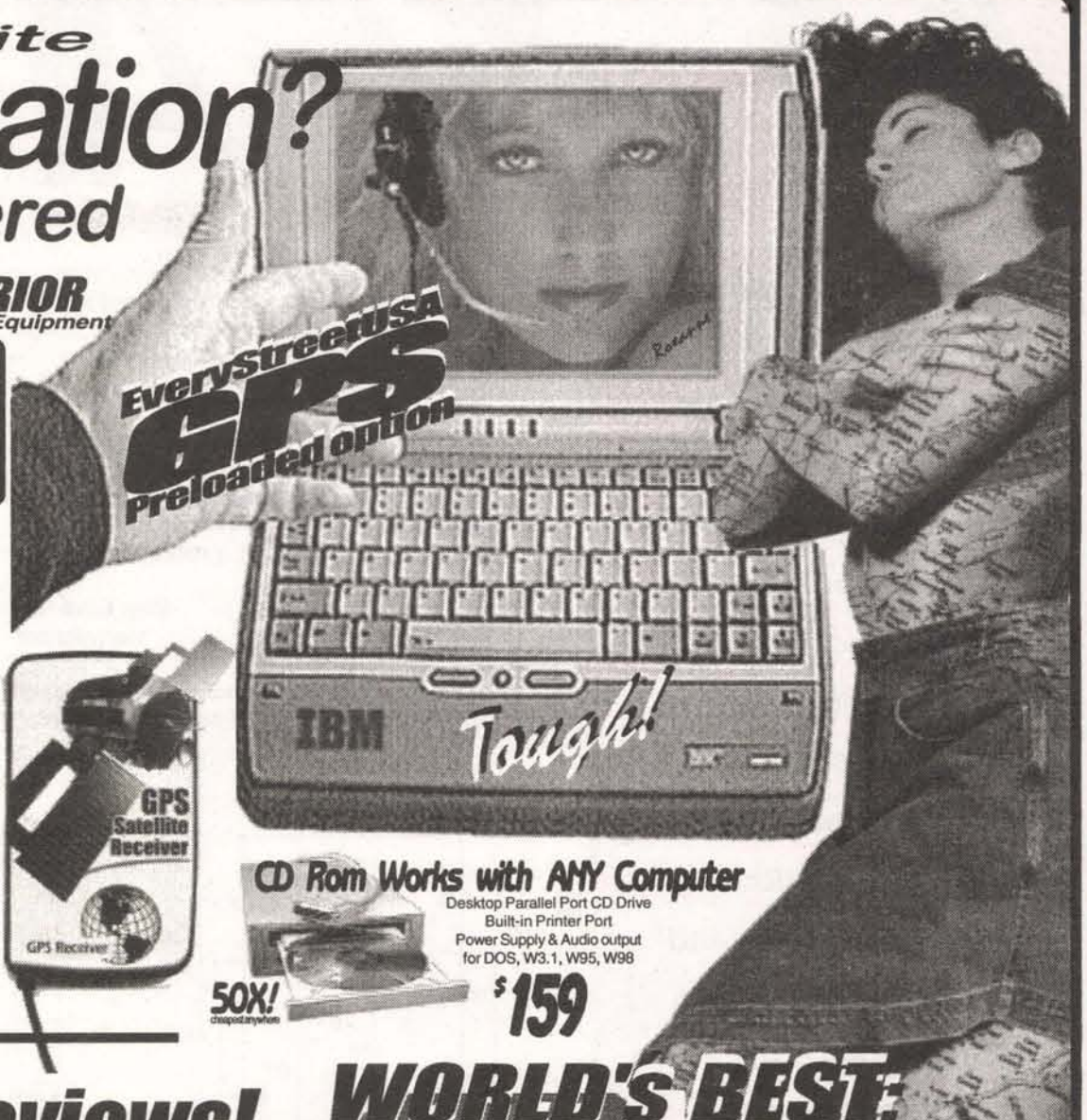


## Drop-proof ! Waterproof !

**The ONLY Waterproof computer under $5,000**

*Silicone Rubberized & Diecast Case ! Shock Mounted 1GIG Drive !*
***ESD / EMF & RF Resistant, Works from -4 to 120 Deg F & Vacuum to 15,000 ft***

> 1- PCMCIA (type 1, 2 or 3), Serial & Parallel Ports in rear
> 16m Ram / 1m Video / **32 Bit** Local Bus 486-50 Mhz & Math Co-processor,
> 28.8k Modem (Internet Ready) > Hydride Battery ($150 Value) >W95
> Sound & Mic > 8.25" Display-64 Shade Monochrome REFLECTIVE

***OPTIONS***
> **GPS Receiver & s/w Preinstalled $159** > Floppy Drive $89
> 12V Car cord $29 > Desktop 48X Cd Rom $159 > Touch Screen $89
> 33k Baud PCMCIA Fax-Modem Upgrade $35 > Carry Strap $4
> 2gig Drive $109 / 3 gig $149

***This was a unique (one shot) purchasing opportunity***
***IT'S NOT OPEN STOCK***
***WHEN THEY'RE GONE, THEY'RE GONE FOR GOOD***
Sold till recently by IBM through their Local Area Network Div at $4,699 & $6,912 as shown here. (they were never discounted)




**CD Rom Works with ANY Computer**
Desktop Parallel Port CD Drive
Built-in Printer Port
Power Supply & Audio output
for DOS, W3.1, W95, W98
50X! cheapestanywhere
$159

## Our Customers Call back with Rave Reviews!

**Low Price / High Performance**

**96Meg!** Wow only $96 !
64Meg only $64 !
GPS Fully Installed $159

Wow $888 -or- 4 Easy payments of $229

***SOYO*** **"Traveler" Includes:**
**233Mhz MMX, 3Gig,32M Ram, 56k Modem, 24X CD, Floppy, MP3 Stereo,** W98SE, Mic, Touch Pad Mouse, 3hr Bat, 2 USB ports, IR Port, 2 PCMCIA ports, Serial & Parallel Ports, Super Lightweight 3.3 lb 9.5" x 7" x 1.5", 8.5" 16million Color SVGA Display, Supports High Resolutions up to 1024 x 768
***FREE Lifetime NetcomTech support (our customers say our tech support is the best in the world)***

**CUSTOM** Carry Case $24

***SOYO*** *is the leading maker of Computer Motherboards for FAMOUS BRAND NAME computers. The "Traveler" has every "State of the Art" feature you want at a Spectacular price. Runs ANY program with ease. Light weight & Ultra portable*

## Why will this Small Laptop Become your Pal ?

***You bring a big machine with you less & less often because it's a pain to drag around. Millions of PDA owners already know this. Unlike PDA's this is desktop power with a fraction of the BIG laptop Bulk & Weight.***

## Razor Sharp, BRIGHT & Easy Viewing
## Comfortable Typing with Wrist Rests

NOTHING ELSE COMPARES
25"
ANIMAL POWER

## WORLD'S BEST: Compuzilla

**ALL DUAL DRIVES**

**900Mhz** AMD K7
**40Gig** (20G x 2)
**128**MegRam
**32**Meg Video
**Full Size Tower**
**2 Removable HDs**
**2 CDs 50X & CDRW**
**2 Floppies**
**Copies Hard Drives**
**Copies CDs & Floppies**
**AntiVirus Firewall**
**LAN 10/100 & 56Kmodem**
**illuminated Face, Stereo**
2USB 3PCI,1AGP, Line in/out, Mic, Midi /Game, 2 Ser, 1 Par
Includes Mouse & Keyboard

## You Won't Find A Better Machine

Optional W98se $125 **$1499**

1 Year Warranty - Satisfaction Guaranteed - The Friendliest People - The **Best** Customer Service
PAYMENT PLAN with Credit Card -or- Layaway ONLY
COD's **SINGLE PAYMENT ONLY**

Email for Detailed Information
843-650-5700 For Questions -or- email: netcomd@aol.com
**ORDERS ONLY** 800-733-3733 **ORDERS ONLY** FAX 843 650 5777 10 - 6 EST Mon - Fri

# ELECTRONICS Q & A

**With TJ Byers**

*In this column, I answer questions about all aspects of electronics, including computer hardware, software, circuits, electronic theory, troubleshooting, and anything else of interest to the hobbyist. Feel free to participate with your questions, as well as comments and suggestions. You can reach me at:*

***TJBYERS@aol.com***

*or by snail mail at Nuts & Volts Magazine, 430 Princeland Ct., Corona, CA 92879.*

## What's Up:

Plans for a sound level alarm and a unique volume limiter for a 20-meter receiver. Where to find manuals, teaching aids, and schematics for all sorts of devices and technologies.

**Q** - I'm a teacher in Santa Clara, CA with a very basic knowledge of electronics and I need some help with a device I want to build. I hear that the design is pretty straightforward, but after asking around, no one can tell me exactly how to do it. Perhaps you can help.

Basically, I want a device that will turn a light on at a certain noise level. When the noise level drops below the trigger point, the light goes off. If the light stays on for a certain amount of time (approximately 10 sec.), a buzzer sounds and stays on until it is reset. Any input would be greatly appreciated.

**Carl Erickson**
**via Internet**

**A** - Yes, it's a simple circuit, but not one most people with just a basic knowledge of electronics would want to attack unassisted. My solution is shown above.

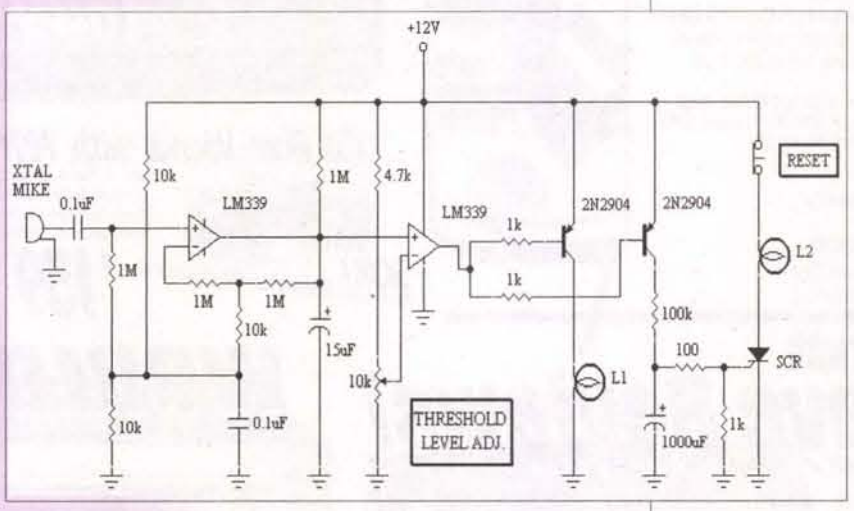


The circuit is built around a pair of comparators. The first comparator functions as an amplifier with a gain of 100 and detector. The output of the amplifier is an open-collector, which the circuit takes advantage of by feeding the output to a negative-peak-rectifier with a decay time determined by the 15uF capacitor; more capacitance equals a longer decay time. The detector provides rectification, and a time delay that prevents loud, short-lived pops from triggering the alarm. The DC output is then compared to the reference voltage level established by the Threshold Level Adj. — the amount of noise you can tolerate before L1 lights. If the din wanes before your time-out period, L1 turns off and stands guard again for a noise outburst. If, however, the clatter continues, the SCR will trigger and turn on L2, which remains lighted until the Reset normally-closed push-button is depressed. This time can be adjusted via the 1,000uF capacitor; the larger the value of the cap, the longer the alarm waits before triggering the SCR.

**Q** - I have a few monitors (two from Hewlett Packard) which are "dead" — no picture, no raster, no nothing. I don't want to just toss them before trying to fix them first. I attended a technical electronic school for 1,200 hours, and since then I have built everything from small robots to digital multimeter kits. So, I can humbly say that I have a good knowledge of electronics, which I really love, and feel that I can repair them with some basic instruction. In other words, where do I start?

**Gill Nascimento**
**via Internet**

**A** - Given your electronic background training, the quickest route would be to study a book on the subject. Here is a list of the best books for basic monitor repair.

***Computer Monitor Troubleshooting & Repair***
by Joseph Desposito, Kevin Garabedian

***Troubleshooting and Repairing Computer Monitors***
(TAB Electronics Technician Library)
by Stephen J. Bigelow

***1999 Computer Monitor Troubleshooting Tips***
by M. I. Technologies, edited by Robert Yount

**Q** - Would you happen to know where I can get a user's manual for a Tektronix 5113 Dual Beam Storage Oscilloscope?

**Peter Stratigos**
**via Internet**

**A** - This is a frequently asked question that I've answered in the past. But it has been more than two years since I updated my list. So, here is a current version.

**Manuals Plus**
130 North Cutler Drive
North Salt Lake, UT 84054
Tel: **801-936-7000**
**www.manualsplus.com**

**Deane E. Kidd W7TYR**
27270 S.W. Ladd Hill Road
Sherwood, OR 97140
Tel: **503-625-7363**

**Ed Matsuda**
**Test Equipment Manuals**
P.O. Box 390613
San Diego, CA 92149
Tel: **619-479-0225**

**Linda Perkins**
**Manual Merchant**
Email: **linda_p@ix.netcom.com**

**Bob Lee**
**R5-D3 Electronic Surplus**
Milwaukee, OR
Tel: **503-513-0410**

**Q** - About a year ago, I obtained an old RCA CRM-P2B-5 CB Radio. Due to the lack of information about these old tube-type CBs, it has basically just sat in a corner all this time. I thought you or maybe a reader could help me get the information I need to get it working. The only way I could identify it was through Retrocom's CB Virtual museum, because the only identification on the unit is a plastic Dynamo label reading "KDB 8894." Just a schematic would be helpful, but I'd prefer a manual.

**Matt Pease**
**via Internet**

**A** - You can obtain a schematic for this transceiver from Sams Photofact **(www.samswebsite.com/index.html)**; it's located in volume CB-1. The CRM-P2B-5 "chapter" also includes parts location and troubleshooting hints in addition to the schematic.

Often, though, you can troubleshoot a radio by simply knowing where the stages are and what they do. You can find this information from the Radio web site at **www.oldtuberadio.com**. However, the site is currently under reconstruction and not totally up to speed, so here is a tube function chart for the CRM-P2B-5.

| Tube Number | Function | Tube Type |
|---|---|---|
| 1 | RF Amplifier | 6BA6 |
| 2 | Converter | 6BE6 |
| 3 | 1st IF Amplifier | 6BA6 |

## Electronics Q & A

| | | |
|---|---|---|
| 4 | 2nd IF Amplifier | 6BA6 |
| 5 | Det./Squelch/AF Amplifier/ Noise Limiter | 6T8A |
| 6 | Receiver Output/Modulator | 6AQ5A |
| 7 | Transmitter Oscillator/ Final Amplifier | 6AQ5A |

**Q.** Could you publish the plans for an automatic volume control that would go between a ham radio receiver and the speaker? When I'm listening to a two-way conversation on my 20-meter receiver and turn up the gain for a distant contact, the closer contact blasts me. The automatic volume control would ease the strong transmission and amplify the distant one.

**John R Thibadeaux**
**Big Island, HI**

**A.** Automatic Volume Control (AVC) circuits are often found in receivers. In fact, your receiver already has one in the RF amplifier section called an Automatic Gain Control (AGC). This circuit prevents the RF input from overwhelming the RF amplifier. While it adjusts the gain of the RF amp, it has little effect on the loudness of the speaker, which is what you're asking for. Here's a novel circuit that should fill your needs.

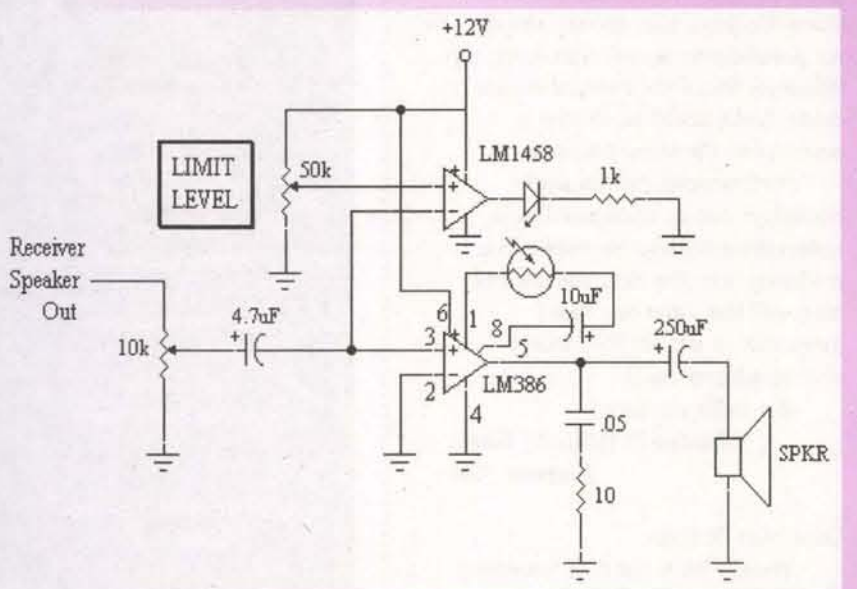


This circuit works on a tight optical coupling between the output of the LM1458 op amp and the LM386 audio power amp. You see, the gain of the LM386 is determined by the value of the resistor/capacitor combination between pins 1 and 8. When these pins are unconnected, the gain of the amplifier is 20. When shorted with a 10uF capacitor, the gain is 200. By inserting a resistance in this gain loop, the gain can be accurately set between these extremes. For example, a 1.2K resistor in series with a 10uF capacitor produces a gain of 50. By replacing a variable resistor in this loop, you can control the gain of the amp. For this application, a CdS photocell serves as the gain resistor, whose resistance is controlled by the amount of light falling on the cell. The brighter the light, the lower resistance — and the lower gain of the amplifier. The louder the audio signal, the less brighter the LED glows and the lower is the resistance of the CdS photocell. Hence, an automatic volume control — of sorts. It's by no means linear, but it gets the job done for what you want.

SURVEILLANCE

Room Transmitters. . . . . from **$30.00**
Telephone Transmitters . from **$29.00**
UHF Pen Transmitters. . . . . **$299.00**
Crystal-Controlled
Transmitters. . . . . from **$75.00**
UHF Telephone Transmitter
& Receiver & Recorder . . . **$299.00**

Catalogues **$5.00**

***And much more — too much to list here!***

**www.confidentialcommunications.com**



## PICmicros & BASIC

**PicBasic Compiler - $99.95**
**PicBasic Pro Compiler - $249.95**

Now it's even easier to program the fast and powerful Microchip PICmicros. The PicBasic and PicBasic Pro Compilers convert your English-like BASIC programs to files that can be put directly into a PICmicro. True compilers for faster, longer programs. BASIC Stamp™ I/II* libraries. For mid-range PIC12C67x, 14Cxxx, 16C55x, 6xx, 7xx, 8x, 87x, 9xx and high-end 17Cxxx (PicBasic Pro only).

*BASIC Stamp is a registered trademark of Parallax Inc.

*New!* PIC-X1 Experimenter/ Lab Board

Assembled - $199.95
Kit with parts - $139.95
Bare PCB only - $49.95

**EPIC Plus PIC Programmer - $59.95**

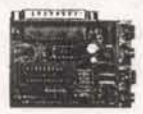

Programs PIC12C5xx, 67x, 14Cxxx, 16C505, 55x, 6xx, 7xx, 8x, 87x and 9xx. Optional ZIF adapters for DIP, SOIC, MQFP, PLCC. Runs off two 9-volt batts or optional AC adapter. Includes programming software and assembler.

**PICProto Prototyping Boards**

Get it wired quicker! High-quality blank prototyping boards for PICmicros. Holds PICmicro, 5V reg, caps, oscillator, DB9-25, large proto area. $8.95 - $19.95

*microEngineering Labs, Inc.*
Box 7532 Colorado Springs CO 80933
(719) 520-5323 (719) 520-1867 fax
http://www.melabs.com

Write in 33 on Reader Service Card.



# JFETS

ULTRA LOW NOISE
LS843 - 3nV/Hz typ

TIGHT MATCHING
LS843 - 1 mV max

- N & P Channel
- Duals & Singles
- Custom Screening
- Die, SMT, Thru-Hole
- No Order Minimum
- COD's Accepted

Second Source for Domestic & Foreign JFETs & Bipolars

Full Service U.S. Manufacturer of Specialty Linear Products

**LINEAR SYSTEMS**

4042 Clipper Court
Fremont, CA 94538
510-490-9160/510-353-0261(Fax)
E-mail: 3623671@MCIMAIL.COM

Write in 34 on Reader Service Card.



# RF Data Modules

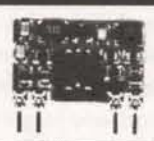

**AM TRANSMITTER**

- Small size: 17.78 x 11.43mm
- CMOS/TTL input
- No adjustable components
- Low Current. 4mA typical.
- 418MHz or 433.92MHz OOK
- Simple to integrate -simply add antenna, data and power
- Range up to 250ft.
- Wide supply range, 2-14Vdc
- SAW controlled - stability
- Also available in DIL package

**AM-RT5 ..... $12.10**

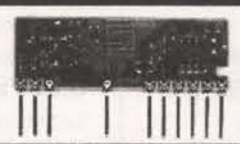

**AM RECEIVER**

- Compact size: 38.1 x 13.7mm
- On-board data recovery. CMOS
- Low current. 2.4mA typical
- 2kHz data rate. CMOS/TTL output
- 5Vdc operation
- On 418MHz or 433.92MHz (4xx)
- No adjustable components
- Patented Laser Trimmed component
- High stability
- Sensitivity: -105dBm
- Available also in 0.8mA version

**AM-HRR3-4xx ..... $10.95**

**FM TRANSCEIVER**

- Only 23 x 33 x 11mm
- Up to 40k bps data rate
- 19200 baud with ASCII
- Up to 500ft. range
- 5v operation
- 0.25mW into 50
- 418 or 433MHz FM
- Fast 1ms enable
- Direct interface to 5V CMOS
- Auto TX/RX changeover

**BIM-4xx-F ..... $87.36**

**RS232 TRANSCEIVER MODULES**

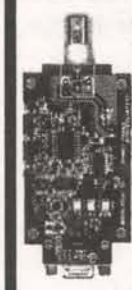

- 4,800 to 38,400 bps half duplex
- 3-wire RS232 interface
- µController with user EEPROM
- RS232 interface protected to ±15kV
- Data packetizing performed by user
- Auto TX/RX changeover
- 418 MHz and 433MHz versions
- Range up to 500ft. (0.25mW ver.)
- 0.25mW & 10mW versions
- Reset switch and status LED's
- 7.5-15V dc via DB9 connector, 20mA

**BIM-4xx-RS232 .... $139.30**

70 x 65 x 15mm

- Up to 19,200 bps half duplex
- 3 wire RS232 interface
- Range up to 500ft
- Transparent data packetizing
- Supports 8 or 9 bit protocols
- Self test function
- Reset Switch & Staus LED's
- 1/4 wave wire antenna on board
- Available in a Simplex Tx/Rx pair.(RTcomTX & RTcomRx)
- 7.5V-15Vdc operation

Transceiver..... **RTcom-4xx..... $247.90**
Transmitter..... **RTcomTx-4xx..... $ 87.15**
Receiver..... **RTcomRx-4xx..... $105.52**

ABACOM TECHNOLOGIES
Free Catalog
Tel: (416)236-3858
Fax: (416)236-8866
www.abacom-tech.com
abacomtech@compuserve.com

# reader FeedBack

Dear Nuts & Volts:

I submitted an answer to Question #8003 Aug. 2000 which was a follow-up of #10011 Jan. 2000.

The gist was someone was looking for the location of a program called Plotgpib.zip.

I'm pretty good at finding things :^) and offered **www.fangorn.demon.co.uk/projects/plotgpib/plotgpib.html**

The #8003 answer with my name attached was the above page text and it looks like I wrote the text whereas all I did was point to the author's site where he has the program for download. I'd hate to be accused of stealing the author's words, etc.

Oh, and the location of the file was not in the resultant text, so the question remains unanswered .

Dontcha hate it when THAT happens? :^)

**Ed**
**via Internet**

*Editors Note — Yeah we do. And just so we can be done with this once and for all, we have posted the file on our FTP site in the August index. Sorry for the mix up.*

Dear Nuts & Volts:

What a surprise to see an old skeleton of mine!

Question #8003 dealt with a software file called plotgpib.zip. This file has an interesting history, indeed.

Back in 1984 or 1985, when I was living in Sunnyvale, CA, a friend, Dave Dillon, showed up with an HP five-pen plotter that he had purchased at a "fire sale" of the inventory at a Control Data sales office. He had a beta copy of Sorcim's SuperCalc 2.0 to draw charts, but no way to connect his PC-XT clone to the GPIB plotter.

I remembered that a pre-IBM PC computer, the Victor 9000, used a special parallel port cable to connect to GPIB (HPIB) devices. Why not do the same thing with my PC XT clone?

So, using a borrowed HP voltmeter and manual as an HPIB reference, I wrote a small test program (running under PC DOS 2.1) to emulate the interface.

Since I needed a bidirectional port to test with, I found that by making a small change on a monochrome/printer PC Board (or printer card), I could use bit 5 of the printer control port to change the data direction of the port.

Interestingly, it turned out that this bit was used in exactly the same way by the much later PS/2 bidirectional port. Some good ideas are timeless, I guess.

To make a long story short, the idea worked and a small terminate-and-stay resident which "hooked" the BIOS printer interface and provided just enough functionality to drive the plotter from SuperCalc resulted.

I returned the plotter and voltmeter to Dave with the program; he used it to generate some presentations and the project was forgotten.

Some years later in 1990, a friend from Minnesota, Greg Mansfield called and suggested that I bundle the code up and put it out for general distribution. I rewrote the code for MASM 5.0, added some documentation, and shipped it. Keep in mind that I did not have access to any GPIB devices, so the rewrite was "flying blind." I guess some errors got left in but were later corrected.

I still don't have any GPIB devices, but it certainly is amazing to see my old code come to the surface after all these years!

For what it's worth, the code was originally written for an XT clone running DOS at 8 MHz. It contains some timing loops that are far too short if run on a Pentium-class machine (easily remedied, however).

The biggest problem is that it probably won't run under Windows, since Windows uses its own drivers for parallel port access. However, for Windows 95 or 98 a virtual device driver (VxD) could be written to accomplish the same purpose.

Furthermore, printer ports nowadays can be configured to be bidirectional without resorting to a soldering iron (the direction control bit is still the same one that I jumpered on my old IBM monochrone adapter card).

But that's my baby!

**Charles P. (Chuck) Guzis**
**Eugene, OR**

Dear Nuts & Volts:

Yowch! Who put that frequency table together?

TV channels 2,3, & 4 are 54-72 MHz. TV channels 5 & 6 are 76-88 MHz. (Not too bad, only one channel off in each band.)

UHF channels 14-88! Wow! Imagine channel 88.

From its inception in 1952, the maximum the UHF dial ever covered was 14-83 (470-890 MHz).

The FCC did away with channels 70-83 in the late 60's. (Although there were and are a very few remaining translators.) So since then, the UHF band has been channels 14-69 (470-806 MHz).

The new DTV (including HDTV) band is channels 14-51 (470-698 MHz). During the transition, however, there will be a limited number of stations using channels 52-69.

And now Ladies and Gentlemen, here's the real whopper: Direct Broadcast satellite at 1500 MHz. I don't think so.

Let's try 11,700-12,200 MHz or more commonly known as 11.7-12.2 GHz (the Ku band).

Really, you should be ashamed of yourselves for such gross inaccuracies.

**Craig Fox**
**Syracuse, NY**


Easy To Use!

**Microcontroller Power!**

Want to add advanced features like floating point math or PWM to your next **Basic Stamp, PIC, SX, HC11**, or other project? Supercharge your design today with PAK coprocessors from AWC.

Let PAKs energize your next microcontroller project:
- ▶ PAK-II—Floating Point Math
- ▶ PAK-V—PWM
- ▶ PAK-VI—PS/2 Keyboard Interface

Features
- ▶ 32-bit floating point math (PAK-II)
- ▶ 8 channels of PWM (PAK-V)
- ▶ Read PS/2 keyboards or mice (PAK-VI)
- ▶ Connects with as few as 1 or 2 wires
- ▶ Data sheets online

AWC
310 Ivy Glen
League City, TX 77573
(281) 334-4341
(281) 754-4462 (fax)

Perfect for data logging, averaging, engineering unit conversion, lamp or motor control, D/A and more.

Visit our Web site now for free tools and projects!

**www.al-williams.com/awce**



Published Monthly By
**T & L Publications, Inc.**
430 Princeland Court
Corona, CA 92879-1300
(909) 371-8497
FAX (909) 371-3052

**E-Mail** — editor@nutsvolts.com
**URL** — http://www.nutsvolts.com

**Subscription Order ONLY Line**
**1-800-783-4624**

**PUBLISHER**
Jack Lemieux *N6ZTD*

**EDITOR**
Larry Lemieux *KD6UWV*
**MANAGING EDITOR**
Robin Lemieux *KD6UWS*

**CONTRIBUTORS**
Robert Nansel
Joe Carr
Jon Williams
Ray Marston
TJ Byers
Gordon West
Bob Lang
Anthony Caristi
Phil Combs
Fernando Garcia
Matthew Evans
Tim Deagan
Dennis Eichenberg

**ON-THE-ROAD EXHIBIT COORDINATOR**
Audrey Lemieux *N6VXW*

**SUBSCRIPTIONS**
Abby Madain

**CLASSIFIED ADS**
Natalie Sigafus

**DISPLAY ADS**
Mary Gamar



Copyright 2000 by
**T & L Publications, Inc.**
*All Rights Reserved*

All advertising is subject to publisher's approval. We are not responsible for mistakes, misprints, or typographical errors. Nuts & Volts Magazine assumes no responsibility for the availability or condition of advertised items or for the honesty of the advertiser. The publisher makes no claims for the legality of any item advertised in Nuts & Volts. This is the sole responsibility of the advertiser. Advertisers and their agencies agree to indemnify and protect the publisher from any and all claims, action, or expense arising from advertising placed in Nuts & Volts. Please send all subscription orders, correspondence, UPS, overnight mail, and artwork to: **430 Princeland Court, Corona, CA 92879.**

## Newsbytes

### ZENITH LCD TV COMBINES HD DISPLAY AND SLEEK INDUSTRIAL DESIGN

The industry's first TFT-LCD combining high-definition display, NTSC TV, and computer monitor capability is being introduced by Zenith Electronics Corporation.

Marrying an HD-capable display with a slim industrial design, the new 15.1-inch set features 1024 x 768 XGA resolution for television and computer display. Both NTSC signals (received with the set's built-in analog tuner) and ATSC signals (provided by a separate digital receiver) are converted to a 1024 x 768 display.

Model ZLD151A1 is built around advanced TFT-LCD (thin film transistor-liquid crystal display) technology developed by Zenith's parent company, LG Electronics, Inc. This display doubles the contrast ratio of other LCD TVs to 200:1 and offers viewing angles of 120 degrees horizontal and 90 degrees vertical.

Designed for flexible connection of digital receivers, DVD players, VCRs, and personal computers, the set provides a 15-pin RGB connector, Y/Pb/Pr Component Video, S-Video, Baseband Video/Audio, and RF inputs, as well as a stereo headphone connector.

The 15.1-inch set features a built-in NTSC tuner with 181-channel capability, comb filter, V-chip parental control, trilingual (English, Spanish, and French) onscreen menus, stereo TV sound, and an ergonomic remote control. Zenith's EZ Features include sleep timer, closed caption capability, and automatic channel programming.

Available now, Model ZLD151A1 is expected to sell for around $2,000.00.

• • • • • • • • • • • •

### New OEM Module Allows Design Engineers to Easily Integrate GPS Time and Frequency

TrueTime, Inc. announced the introduction of its new GPS Synchronized Time and Frequency Module, the GPS-TFM. The new module is an ideal solution for applications such as video synchronization, cellular frequency references, E911 Time of Arrival position determination systems, telecom synchronization systems, network quality of service measurement systems, and other applications requiring precise time and frequency. The GPS-TFM can be custom tailored to meet specific OEM requirements. Modules can be supplied delivering a broad range of reference frequencies and timing outputs. The GPS-TFM is specifically designed for OEM applications that require a precise source of time and frequency with a simple interface, small size and low cost. Field upgrades can be quickly programmed by sending data through the RS-232 port to the GPS-TFM's flash memory. Integration into host systems is simplified by a single +12VDC power input.

The evaluation module acquires precise time and frequency from atomic clocks aboard (GPS) satellites with 40 nanosecond time accuracy and 1 $X10^{-12}$ frequency accuracy referenced to the world's international time standard — Universal Coordinated Time (UTC). During satellite tracking there is no long term frequency drift.

The time module delivers time over an RS-232 serial bus and utilizes the bus to accept a time comparison programming value. This value, with a resolution of one millisecond, triggers an output pulse when the UTC time equals this time value. The programmable time comparison pulse and a one Pulse Per Second (PPS) output signal are the high accuracy time outputs. In addition, the module features a 10MHz frequency reference which is cycle-locked to the one PPS output signal.

The GPS-TMF joins TrueTime's family of time and frequency solutions for today's complex computer, network, communications, and instrumentation systems. Evaluation GPS-TMF modules are available now with pricing starting at $ 1,500.00.

TrueTime's web site is **www.truetime.com**.


ELECTRONIX EXPRESS

Visit Our Website At http://www.elexp.com

WELLER SOLDERING STATION – MODEL WLC 100
- Variable power control (5 to 40 watts)
- Replaceable heating element
- Quality light-weight pencil iron

$36.95

LOWEST PRICE 20MHZ

INSTEK OSCILLOSCOPE
MODEL GOS-620
Dual Channel – 20MHZ (INCLUDES PROBES)
$299.00

SCOPE PROBE 60 MHZ SWITCHABLE X1, X10 $12.95

DIGITAL MULTIMETER
32 Ranges – 3½ Digit
MODEL MY-64 $27.95
AC/DC Volt/Current, Res. Cap., Frequency. Rubber Holster Included

INSTEK® FUNCTION GEN. WITH INT/EXT FREQ. COUNTER
3 MHz, Digital Display
MODEL 8216 $199.00

ALLIGATOR LEADS SET OF 10 $2.10

SWITCHES Mini Toggle SPDT ..... 50¢ ea.

SOLDERING IRON 3-WIRE
HIGH PERFORMANCE
#060501 $5.25

PAD-234
DIGITAL/ANALOG TRAINER
Complete portable workstation. Variable and fixed power supplies, function generator, digital I/O, rugged design, high impact case.
Assembled $150.00 Kit $110.00

HIGH QUALITY TOOLS
With Cushion Grips and Return Spring
Needle Nose Pliers $2.95 | Wire Stripper $1.50 | Diagonal Cutter $2.95

DC POWER SUPPLIES
MODEL HY3003 – DIGITAL DISPLAY
Variable output, 0-30 VDC, 0-3 Amp $89.00
MODEL HY3003-3 – TRIPLE OUTPUT
Two 0-30 VDC, 0-3 Amp variable outputs plus 5V 3A fixed. Digital Display.
$215.00

RSR—TELECOMMUNICATIONS TRAINER
HANDS-ON TELEPHONY, LAN, CATV EXPERIENCE WITH ONE SELF-CONTAINED UNIT
T-Comm Trainer (TCM-100) ..... $199.95
Lab Manual / Work Book ..... 26.95
Component and Supplies Kit ..... 37.95
Tool Kit ..... 119.95
Only $199.95
MODEL TCM-100

SOLDERLESS BREADBOARD
830 tie points. MB102PLT model features 3 binding posts and aluminum backplate.

| Part No. | 1-9 | 10+ |
|---|---|---|
| MB102 | 5.95 | 5.00 |
| MB102PLT | 8.95 | 8.00 |

MOTION DETECTOR $2 ea. – 10 For $15

PRESS-N-PEEL
Press-n-Peel
PC Board Transfer Film
PNP Blue 5 Sheet .... $9.90
PNP Wet 5 Sheet ..... 9.90
PNP Blue 20 Sheet .. 28.95
PNP Wet 20 Sheet ... 28.95

RESISTOR KIT
1/4 W 5% film. 5 pieces each of 73 values. 365 pieces total.
$3.95

| | |
|---|---|
| LM555 10 Min. | 22¢ ea. |
| LM741 10 Min. | 27¢ ea. |
| 74LS00 10 Min. | 18¢ ea. |
| 7805 Regulator 10 Min. | 30¢ ea. |
| 2N3904 10 Min. | 6¢ ea. |
| PN2222 10 Min. | 6¢ ea. |
| Red LED T 1¾ 10 Min. | 6¢ ea. |
| Green LED T 1¾ 10 Min. | 7¢ ea. |
| Yellow LED T 1¾ 10 Min. | 8¢ ea. |
| Photo Cell 10 Min. | 65¢ ea. |
| 100K Pot., 1" Shaft PC Mt. 10 Min. | 15¢ ea. |

FREE CATALOG
MORE Low-Priced Items In Our FREE 256-Page Catalog

TERMS: Min. $20 + shipping. School Purchase Orders, VISA/ MC, Money Order, Prepaid. NO PERSONAL CHECKS, NO COD. NJ Residents: Add 6% Sales Tax.

In NJ: 732-381-8020
FAX: 732-381-1006
365 Blair Road • Avenel, NJ 07001-2293
800-972-2225
http://www.elexp.com
email: electron@elexp.com

Write in 65 on Reader Service Card.



CIE INSTITUTE OF ELECTRONICS · 1934 ·

It's almost like being paid to study.

Earn an Associate Degree in Electronic Engineering Technology...
Put your knowledge of electronics to work for you. CIE offers the most comprehensive Associate Degree program offered in electronics. Best of all you study at your own pace with the full resources of CIE just a phone call or a click of a mouse away.

It's Comprehensive and Unique. You Pay for Only the Time You Use!
You won't find a better school than CIE if you want to accomplish your goals without pesky time restrictions (commuting, 8 hour class days, etc.) at CIE you study at your own pace, even an accelerated pace. And if you're like most readers of this magazine, your electronics background can help you receive your degree in less than the maximum 8 terms allowed. Finish sooner and you can save thousands of dollars in tuition. It's almost like being paid to study.

Get all the details on CIE's Associate Degree Program, World College's Bachelor Degree Program and CIE's 10 Career Courses.

Send or call for a Free Catalog Today!
(800) 243-6446
visit www.cie-wc.edu

CIE
A School of Thousands.
A Class of One. Since 1934.

Yes! Please send me a FREE Course Catalog on all of CIE and World College's Courses and Degree Programs.
Name: _____
Address: _____
City: _____
State: _____ Zip: _____
Phone: _____
E-mail: _____
Send To CIE: 1776 E. 17th St., Cleveland, OH 44114-3679

# FAMILY RADIO SERVICE MORE THAN TOY WALKIE-TALKIES

by Gordon West

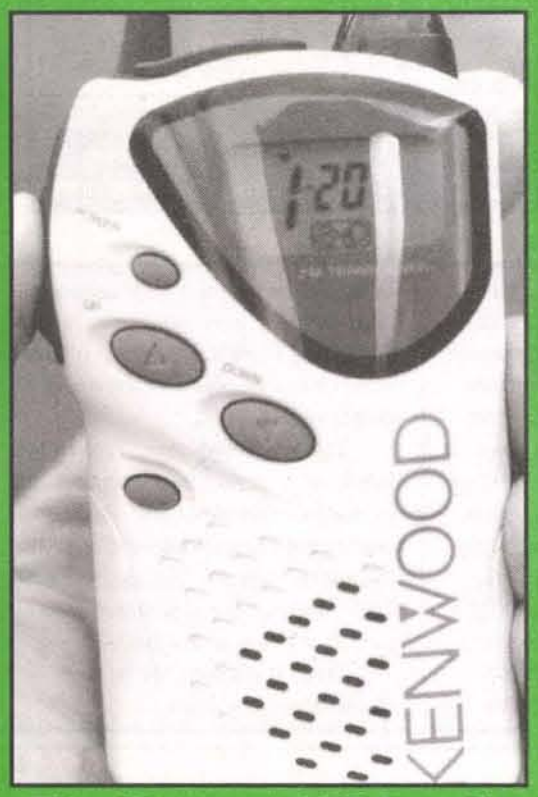


**The Kenwood FRS radio has input jacks for a speaker/mike or slow scan TV.**

**The one-half watt UHF FRS radios work up to two miles in the city.**

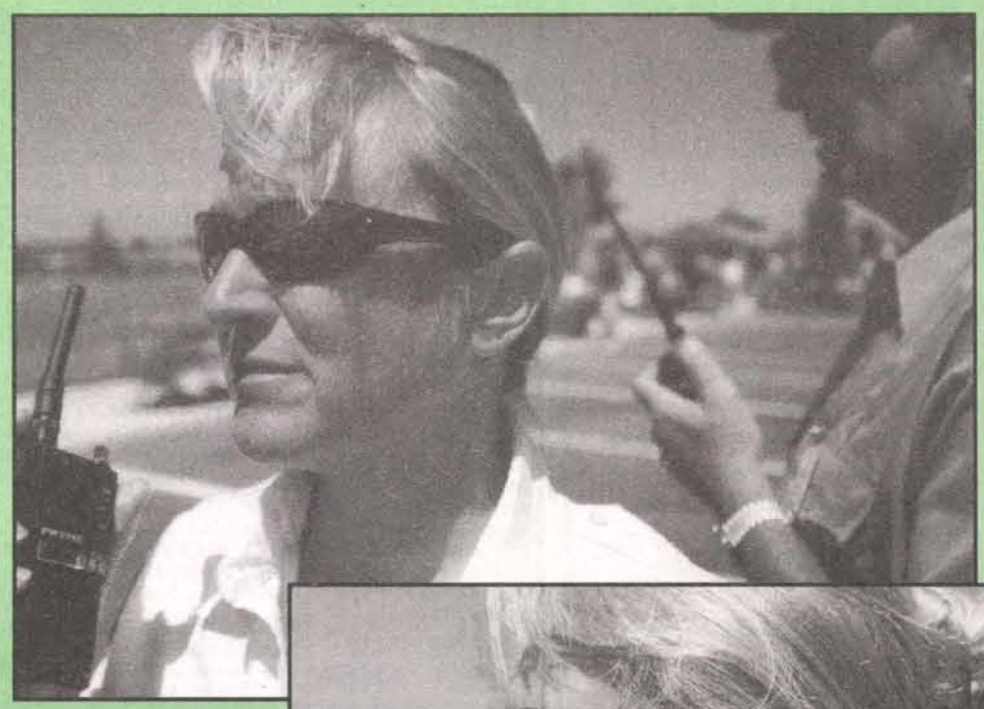

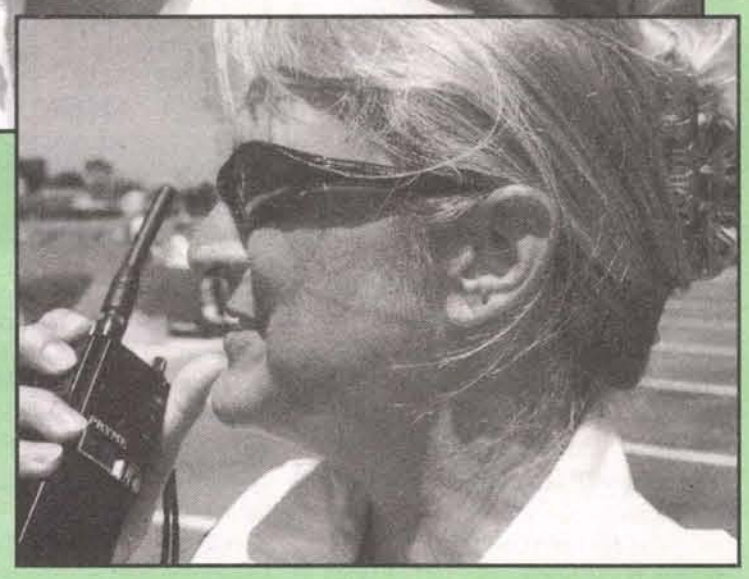

**Fire Prevention Specialist Teri Durnall uses a five-watt GMRS radio on FRS Channel 4 (GMRS licensed).**

Five years ago, Robert Miller K2RM, of RadioShack asked for my support to a petition he had sent to the Federal Communications Commission (FCC) for a low-power UHF, unlicensed radio service. He asked me my frank opinion on whether or not the two-way radio industry might try and wage a land-mobile radio industry war of negative comments to his petition.

After reading the petition for a low-power, no-license, UHF radio service, I felt that any land-mobile, two-way radio manufacturer opposing his position would ultimately be shooting themselves in both feet if they couldn't see the big picture of introducing low-cost, license-free radios for casual and business radio use, and then watching these operators upgrade to a more powerful land-mobile radio system, or trunking radio systems, and a variety of step-up, two-way radios to expand their communications range.

Sure enough, one land-mobile radio manufacturer voiced negative comments on FRS, yet today they are one of the biggest suppliers of inexpensive FRS sets and acknowledge these little two-way radios may ultimately lead to a more professional step-up radio system for the future of their clients.

"We love FRS because we are regularly developing new customers and, they many times, switch up to a more professional radio system," comments a Motorola dealer at a recent land-mobile trade show.

"I consider FRS radios a convenient stepping stone from no radios to a complete professional, licensed, two-way radio system," adds the Motorola salesman.

In the Jan. '97 issue of *Nuts & Volts*, my feature article on Family Radio Service was reprinted by most FRS equipment manufacturers (totally only about eight) so they might better inform the public what FRS was all about. In the Oct. '98 issue of *Nuts & Volts*, a follow-up article went into greater technical detail about those splinter-channel FRS frequencies, and some of the most bizarre uses of the equipment that have far exceeded what Robert Miller ever envisioned. These little half-watt, narrow-band, FM communicators were far from being just 49 MHz toy radios for the kids. The Family Radio Service is now a part of many local radio systems, and has earned the respect of even seasoned radio amateurs who originally thought the 14 license-free channels would become another Class D Citizen's Band bungle.

"All of the major ham radio manufacturers offer FRS transceivers," comments William Alber WA6CAX, a ham radio instructor in the San Francisco Bay area. "ICOM, Kenwood, Yaesu, Alinco, ADI — all of these radios offer a natural stepping stone from no license to ham license," adds Alber, showing off his "class loaner" plan where his registered students all use a tiny FRS to

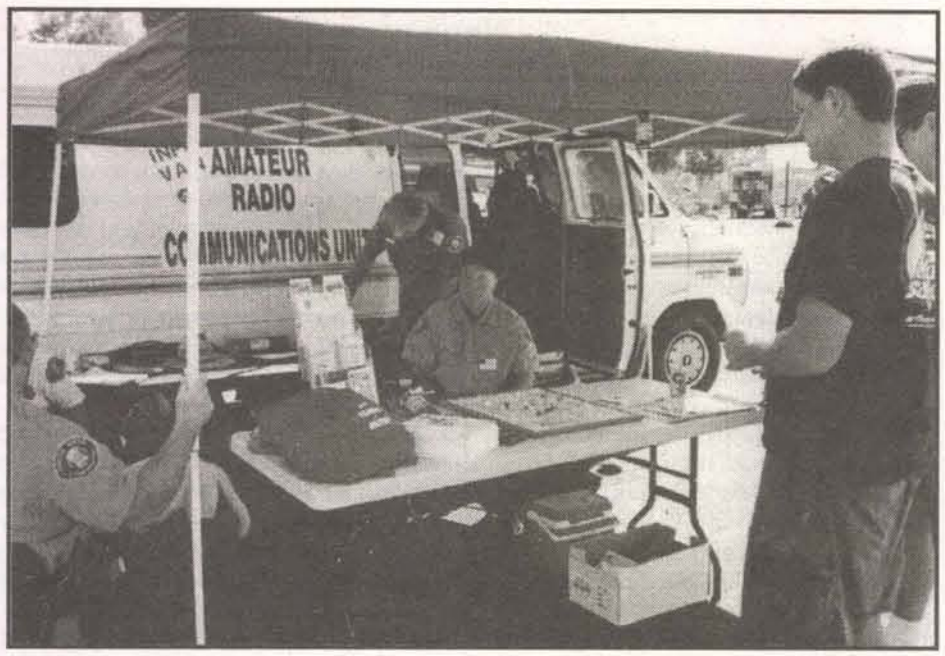


**A mobile amateur radio communications unit stages to act as a relay for FRS low-power radios.**

communicate to him on an evening "net" where he continues his classroom discussion of radio etiquette actually on the air.

Hams also use FRS as a way of introducing two-way radio to their kids; and, if the kids really get into operating these tiny little radio sets, they could very well "signal" that they are good candidates for the amateur radio code-free Technician class license. And, if the kids show no interest in the two-way radio, this is a sure indication that sending them through a ham radio class for the code-free Technician class license will probably be a waste of time. "Either they like the lure of talking over airwaves, or they don't — FRS will let hams check their kid's interest in airwaves long before the decision is made to send them through an evening or weekend class," adds Alber.

The FRS is governed by the FCC under the Code of Federal Regulations, Title 47, Part 95 — PERSONAL RADIO SERVICES. The FRS's general provisions are found in Subpart B, specifically Rules 95.191, 95.192, 95.193, and 95.194. The simple rules say that you can use these little radios as long as you are not a representative of a foreign government. You must also share the 14 channels with other users.

## MORE THAN TOY WALKIE-TALKIES

| | |
|---|---|
| Channel 1 | 462.5625 MHz |
| Channel 2 | 462.5875 MHz |
| Channel 3 | 462.6125 MHz |
| Channel 4 | 462.6375 MHz |
| Channel 5 | 462.6625 MHz |
| Channel 6 | 462.6875 MHz |
| Channel 7 | 462.7125 MHz |
| Channel 8 | 467.5625 MHz |
| Channel 9 | 467.5875 MHz |
| Channel 10 | 467.6125 MHz |
| Channel 11 | 467.6375 MHz |
| Channel 12 | 467.6625 MHz |
| Channel 13 | 467.6875 MHz |
| Channel 14 | 467.7125 MHz |

- Power output one-half watt maximum
- Deviation ±2.5 kHz maximum
- Audio frequency response 3.125 kHz maximum
- No external antenna connector
- Frequency tolerance .00025%

The FRS equipment operates on interstitial frequencies to the more powerful General Mobile Radio Service. FRS Channels 1 through 7 fall between powerful GMRS output frequencies. FRS Channels 8 through 14 fall between sensitive GMRS repeater input frequencies.

"Yes, we *are* concerned about interstitial


**Polaris can supply you with all of today's Hottest Video Technology, Micro Cameras to Professional Security Supplies**

*Color video camera Power/Video cable 330 TV Lines 3.6mm Lens LP-850c $179.95*

*Color & weatherproof Power/Video cable 4.3mm Lens WP-300c $229.95*

*LP-850w $169.95*

*Built-In Infrared Illuminator, Camera can See in the Dark without Additional Light Source!*

*Color 400 TV Lines Power/Video cable Lens: C-mount Auto Iris TC-300ux $229.95*

LP-850p $119.95 — LP-850i $109.95

**470 TV Lines Color "Micro-Zoom" Video Board Camera**

*470 TV Line Color Board Cameras*, Technology has added high resolution to its smallest cameras, We've added a Vari-Focal lens to an already powerful board camera. The 4-8mm Vari-focal lens is a tool you won't be able to live without once you added this camera to your application.

MB-1250HRp $149.95

MB-1250HRVF $199.95

- **MB-1250HRVF $199.95** 470 Hi-Res Vari-Focal Color Camera
- **MB-1250HRp $149.95** 470 Hi-Res Pinhole Color Camera
- **MB-1250p $99.95** 350 Low-Res Pinhole Color Camera (not pictured)

*MB-1250HRp & MB-1250p Same physical look two resolution options to choose from: 470 or 350 TV lines.*

**Flat Screen TFT-LCD Monitors**

*COLOR 5.6" TFT and 6.4" TFT Monitors*

**TFT-4 $209.95** Color 4" Screen. (Size: 6"(W) x 4.5"(H) x 2"(D) An excellent 4" monitor for one camera monitoring or for setting up cameras during installation or maintenance.

TFT-5.6 $429.95
TFT-6.4 $479.95
(Includes: patch cable & power supply)

Cameras that can see in total darkness

Gel Cell Batteries for wireless equipment

**Wireless Video**

GW-2400S - $449.95 Includes: 2.4 Ghz Color Wireless Camera. Receiver with Built-In Monitor.

GW-2400 $229.95
- 1 - 4 Transmitting Channels.
- Can be integrated with other wireless applications.
- Up to 985 ft. Operating Distance.
- *Dimensions: 2.5"(W) x 2.18"(H) x 3.28"(D)*

Video/Stereo Audio

"Portable" Color Wireless System — GM-2400 $269.95 (Monitor/Receiver) — GC-2400 $229.95 (Camera) — FCC Approved — Transmitter — Receiver

*CM-500CBC*, A tough aluminum cased Color CMOS camera with mounting bracket. BNC video & barrel power connection for Plug & Play hook-up. *View through standard VCR or Monitor!*
- 1/3" Color CMOS
- 380 - TV Line
- 1 LUX
- Lens 3.6 mm
- Auto Iris

**CM-500CBC $129.95**

Dimensions: 1.5" Sq without stand.

**CMOS C-Mount B/W & Color Cameras**

(Comes with a 3.6mm lens.Shown) — (C-Mount option w/o 3.6mm lens) — (Comes with a 3.6mm lens B/W model comes with stand)

B/W Camera: CM-220 $69.95
Color Camera: CM-220c $139.95

Free Polaris Video Catalog

15 Years of Quality Service

*The CM-220 & CM-220c are truly outstanding performance cameras with 380 Line Resolution & C-Mount options.*

**Polaris Industries** http://www.polarisusa.com **1-800-752-3571**

470 Armour Drive NE • Atlanta GA 30324-3943 • Tech Info 404.872.0722 • FAX 404.872.1038

Write In 131 on Reader Service Card.

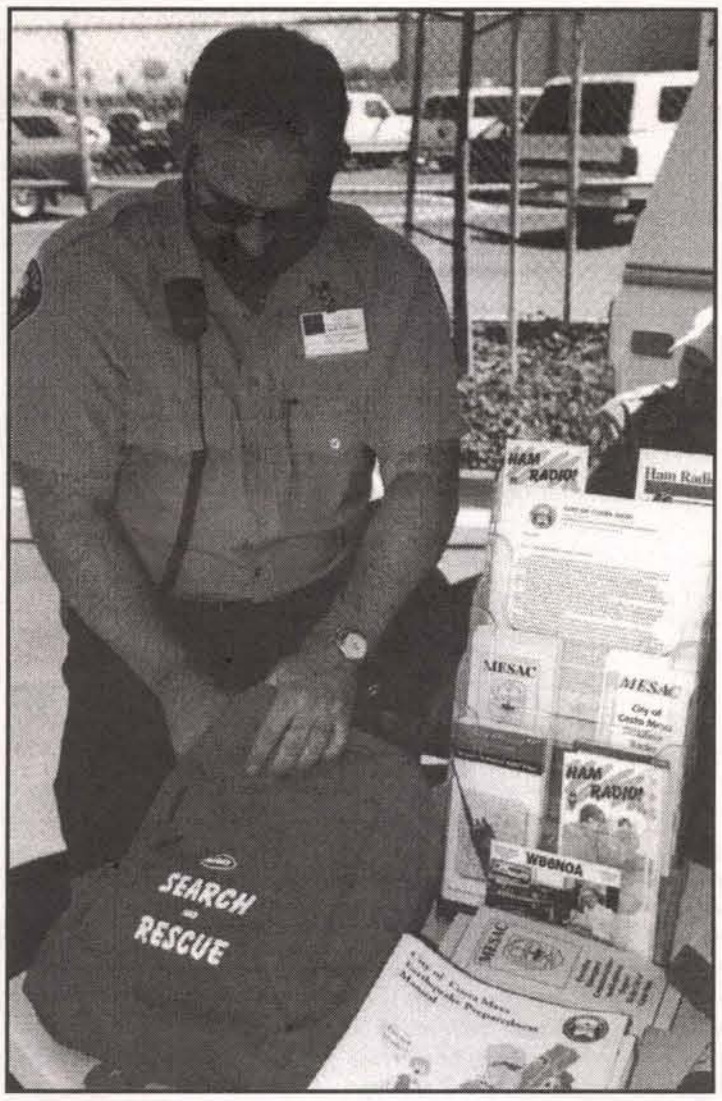


**CERT members use little FRS radios to report area incidents to a command station.**

## MORE THAN TOY WALKIE-TALKIES

channel interference on FRS Channels 8 through 14 that fall between sensitive GMRS repeater input frequencies," comments Bob Leef (949-770-9501) with REACT International, Inc. "REACT (Radio Emergency Associated Communications Teams) is suggesting the adoption of FRS Channel 1, 462.5625 MHz, as the official call channel, without tone," adds Leef. "We seek the support of agencies such as the National Park Service, and other recreational areas, to publicize the 'call channel' as a common frequency to use for communicating with others when needed," adds Leef.

REACT, well known for its dedicated team of thousands of radio volunteers to Class D CB Channel 9, and their tireless monitoring of GMRS emergency and assistance frequency 462.675 receive, 467.675 transmit, sees the emergency capabilities of these little FRS transceivers.

Most recently, two young Oregon brothers, ages seven and five, of McMinnville intercepted a plea for help by some injured mountaineers on Mount Hood, more than 80 miles away. The brothers — Fletcher and Parker Wold — alerted their dad who contacted authorities and triggered a full-scale mountain rescue. It was quite by accident that the kids just happened to be on the right FRS channel to hear the call for help.

In Southern California, a couple of lost hikers spent 40 minutes calling on 14 different FRS channels using 38 different tones per channel to seek assistance, and again it was kids who were just playing around with these radios that were finally able to establish communications with the lost hikers and talk them down to their heavily wooded campsite. Thank goodness for an extra set of AAA batteries that most FRS transceivers run on.

The city of Costa Mesa, CA, also recognizes the importance of these one-half watt, narrow-band, FM communicators in connection with their ongoing Citizen's Emergency Response Team (CERT) disaster preparedness communications. Costa Mesa fire prevention specialist Teri Durnall, amateur call sign KF6VVC, explains:

Our city's amateur radio 60-member emergency group, MESAC (Mesa Emergency Service Amateur Communications), developed a plan where they would hold weekly radio 'nets' on FRS Channel 4 with the city's trained CERT members who owned their own FRS transceivers. CERT-trained city employees with city-owned FRS transceivers would also take part in this evening net, and the whole idea was the amateur operators staging at their local school yard in a disaster or disaster prep and having contact with local citizen and city employees over FRS Channel 4. These local FRS neighborhood damage reports would then be relayed back to our city's EOC over our amateur radio repeater.

And, once the word began to spread about this city-wide plan for CERT members to come up on Channel 4 during a potential widespread power failure, earthquake, or nearby fire, other cities began to tune in and found out how important the small FRS walkie-talkie was in the overall CERT communications plan.

"This has been one of the best investments we have made in our CERT program," comments Durnall, pointing out that the city of Costa Mesa now has one of the best emergency communication systems around when it comes to getting block-area reports directly from their trained CERT members plus other residents in the city who might also possess FRS equipment. In fact, the FRS capability is now a great selling tool for the city's ongoing CERT program.

Kenwood FRS equipment also takes the Kenwood-specific speaker/earphone headset that also doubles for the jacks for the Kenwood VCH1 video communicator. Instead of tying up a wide area amateur radio repeater with 15 seconds of a color video image, why not send the image over an FRS channel? A little interpretation of the rules is due, here.

FRS Rule 3, 95.193, talks about FRS to conduct two-way voice communications with another person. But the rule (b) also allows for the transmitting of tones (video image by altering tones) "to make contact or to continue communications with a particular FRS unit ... if the tone lasts no longer than 15 seconds at one time." During a recent test, the FRS equipment from Kenwood at both ends of the circuit gave us a crystal-clear color image in exactly 15 seconds of total transmit time. This could allow a CERT member with a Kenwood FRS transceiver and a Kenwood VCH1 video communicator add-on device to send a picture across town to the city of Costa Mesa EOC to be viewed on the big screen television as a high-resolution snapshot of any damage within their block.

Family Radio Service Channels 1 through 7 are in between GMRS repeater outputs, and the FCC now allows licensed GMRS users to run up to five watts on these interstitial channels, too. FCC Rule 95.29(f) gives GMRS-licensed users full access to these same FRS interstitial channels to talk simplex. This *could* allow a licensed GMRS operator in the city of Costa Mesa to transmit to another GMRS family member with five watts of

Motron Electronics
PO Box 2748
Eugene OR 97402-0280
(541) 687-2118
http://www.motron.com/
DTMF Controller
Only $149.00 Plus S/H
The Auto-Kall® AK-16 DTMF Controller Board features 16 relay driver outputs and DTMF to X-10 house control capability! Control the relay driver outputs, X-10 modules, or both with your radio keypad! X-10 operation requires the PL-513 Power Line Interface ($20). The AK-16 mates readily with our RB-8/10 ($99) or RB-16/10 ($149) relay boards. The 0-12 digit security code is user programable using your DTMF keypad. Additional features include re-programmable CW ID and several modes of operation, including two with CW response. The AK-16 is a fully assembled and tested printed circuit board.
Price and Specifications are subject to change without notice
Auto-Kall® AK-16
DTMF Controller Board
VISA MasterCard
Visa, MasterCard, American Express, Discover
And Government Purchase Orders accepted.
S/H: $8 USA; $11 Canada; $16 Foreign
Se Habla Español. Pida Por Don Moser.
DISCOVER
Info: (541) 687-2118
Orders: (800) 338-9058
Fax: (541) 687-2492

Professional 10 HOUR RECORDER
Factory Direct
"BUILT LIKE A BATTLESHIP"
• Heavy duty commercial recorder - NOT improvised from consumer models
• 12, 14, and 16 hour models also available
• BUILT-IN voice activation (add $30)
• Applications information included
• Dimensions: 11.5 x 7.0 x 2.75"
SPECIAL Nuts&Volts Price..
$159
FREE 40-PAGE SPECIAL EQUIPMENT CATALOG!
COD's OK. Sorry, no credit cards. Free catalog USA only; other countries $5. Price Includes UPS to 48 States on Pre-Paid Orders
Viking Systems International 100 North Hill Drive #42, Brisbane, CA 94005
Phone (415) 467-1220 • Fax: (415) 467-1221 • Web: vikingsysintl@aol.com

Write in 132 on Reader Service Card.

## MORE THAN TOY WALKIE-TALKIES

power on GMRS Channel 4, easily received by one-half watt handhelds where disaster instructions might be "overheard" by all units on FRS Channel 4. In an emergency, FCC rules specifically allow different radio services to exchange communications, and this could allow a 10 times more powerful GMRS user to legally communicate with FRS CERT members on their appropriate city FRS-adopted channel.

"This could allow a base station five-watt signal to be heard all over town, just as long as the GMRS operator speaks well away from the base station microphone," observes Hal Puritz KF6WQS, with the city of Costa Mesa MESAC group. "This is a serious modulation consideration when a little FRS radio is receiving interstitial GMRS calls," adds Puritz. Most FRS handhelds will chop-out any deviation more than approximately 3.5 kHz. The properly adjusted GMRS transceiver could have as much as 5 kHz of deviation.

When I recently spoke with FRS founder Robert Miller, he seemed quite pleased that his 14 suggested FRS channels worked in nicely with the present eight duplex GMRS frequency allocations.

### GMRS CHANNELS REQUIRE FCC LICENSING!

The operation of GMRS equipment on the seven interstitial FRS channels is only allowed after FCC licensing. The GMRS is a radio service intended primarily for use by people communicating with their family and friends during recreational activities, such as fishing, camping, and boating. It may also be used by family and friends as part of disaster preparedness and CERT activities. Your GMRS license will authorize you and all other members of your immediate family to communicate with each other using type-accepted GMRS equipment. You file for a GMRS license on FCC Form 605 electronically. This is accomplished using the FCC's new universal licensing system (ULS). Just point your web browser to http://www.fcc.gov/wtb/uls. I am told that this ULS process is running smoothly, and within hours you may obtain your official GMRS license that then opens up the seven channels shared with FRS equipment.

"Get your XYL on the air — no test required," reads the ad from Pryme Radio Products. "Channels 1 through 7 in both our Pryme Clear Connect™ and Sport Connect™ are the same as FRS Channels 1 through 7, so you can still talk with any FRS radio in your group," the ad goes on to say — but with a bold heading that operation in the general mobile radio service requires an FCC-issued GMRS license. I have operated the Pryme UHF transceivers, and they work well in both GMRS, as well as FRS frequencies at a full five watts of power output.

Last year, the FCC amended GMRS rules lifting the restriction on base-to-base communications. Secondly, another FCC rule change last Feb. '99 allows any GMRS licensee to operate on any GMRS repeater with that repeater owner's permission. The FCC ultimately rescinded their initial decision of making 462/467.675 as a repeater pair only for emergency and traveler's assistance — it now remains available for users like REACT to conduct normal traffic-watch comms.

**Costa Mesa hams work a drill over FRS frequencies.**

A good insight on GMRS may be seen at the personal radio steering group website at www.provide.net/~prsg.

"The recent news articles about people being saved points out the ability to talk to others is not only desirable, but can save lives," finalizes Bob Leef of REACT International. "REACT is suggesting to radio manufacturers, magazines, and other news media and the public that FRS Channel 1, 462.5625 MHz, be used as a call channel, open squelch," adds Leef. You can visit the website for REACT at www.reactintl.org, or contact Robert Leef directly at 949-770-9501. Mr. Leef also has details on a personal project to develop two-way communications specifically for motorists, sharing some of the same FRS and GMRS frequencies. He envisions it as a "driver's radio service," and he seeks comments from those of you that might be interested in working with him to bring this service on the air.

So, next time you see one of those inexpensive, one-half watt, UHF FRS transceivers, do consider them more than just a toy. In fact, if you have kids using them now, the FRS equipment is a good starting ground for teaching good operating techniques over the airwaves.

We encourage other cities who may want to learn more about how the city of Costa Mesa CERT program is set up using both FRS, as well as ham radio to contact Ms. Teri Durnall, Fire Protection Specialist/CERT Coordinator, City of Costa Mesa, P.O. Box 1200, Costa Mesa, CA 92628-1200. **NV**

| Base Station, Mobile Relay Station, Fixed Station, or Mobile Station | | Mobile Station, Control Station, or Fixed Station in the Duplex Mode | |
|---|---|---|---|
| GMRS | Ch. 1 - 462.550 MHz | GMRS | Ch. 1 - 467.550 MHz |
| | Ch. 2 - 462.575 MHz | | Ch. 2 - 467.575 MHz |
| | Ch. 3 - 462.600 MHz | | Ch. 3 - 467.600 MHz |
| | Ch. 4 - 462.625 MHz | | Ch. 4 - 467.625 MHz |
| | Ch. 5 - 462.650 MHz | | Ch. 5 - 467.650 MHz |
| | Ch. 6 - 462.675 MHz | | Ch. 6 - 467.675 MHz |
| | Ch. 7 - 462.700 MHz | | Ch. 7 - 467.700 MHz |
| | Ch. 8 - 462.725 MHz | | Ch. 8 - 467.725 MHz |


**PRINTED CIRCUIT BOARDS**

*QUALITY PRODUCT*
*FAST DELIVERY*
*COMPETITIVE PRICING*

*We will beat any competitor's prices!!!*

* UL approved
* Single & Double sided
* Multilayers to 8 layer
* SMOBC, LPI mask
* Reverse Engineering
* Through hole or SMT
* Nickel & Gold Plating
* Routing or scoring
* Electrical Testing
* Artwork or CAD data
* *Fast* quotes

**10 pcs** (3 days) 1 or 2 layers **$249**
**10 pcs** (5 days) 4 layers **$695**
(up to 30 sq. in. ea.) includes tooling, artwork, LPI mask & legend

PROTOTYPE THROUGH PRODUCTION

**PULSAR, INC**

9901 W. Pacific Ave.
Franklin Park, IL 60131
Phone 847.233.0012
Fax 847.233.0013
Modem 847.233.0014
yogii@flash.net · flash.net/~yogii

Write in 130 on Reader Service Card.

ELECTRONIC MILITARY SURPLUS

**FAIR RADIO SALES**

WEBSITE: fairradio.com
E-MAIL: fairadio@wcoil.com
PHONE: 419-227-6573
FAX: 419-227-1313
1016 E. Eureka - Box 1105
Lima, OH 45802
VISA, MASTERCARD, DISCOVER
Address Dept. N/V

**2000 WATT SOLA REGULATOR**

2000VA Constant Voltage Transformer by Sola #23-23-220-8. Input at 60 Hz: 95-130V at 23.5A, 175-235V at 12.6A, 190-260V at 11.6A, 380-520V at 5.8A. Output at 60Hz: 120/240V at 2000VA. 17.8x11.4x9.6, 115 lbs shipping. Unused, $250.00; 2 for $450.00

**WHEATSTONE BRIDGE**

ZM-4 Wheatstone Bridge used to measure DC resistance. Resistance measurement range 1 ohm to 1,011 M ohms +/-0.15%; As a resistance substitution box it is adjustable in 1 ohm steps from 0-10110 ohms. The current limit of the resistors is 16-500ma depending on setting. Galvanometer indicates balance in test circuit. Requires three "D" batteries. Also 22.5 to 200 VDC for more accurate readings above 1000 ohms. 5.8x7.3x8.8, 12 lbs sh. Used Reparable, $34.50 Used Checked, $49.50; Manual repro, $12.00

Allow money for shipping on merchandise.

SEND FOR OUR 2000 CATALOG !!

Radios - Test Equipment - Tubes - Antennas

Write in 133 on Reader Service Card.

### SUPER POWERFUL, SHARP, NIMH BATTERY, Type BT-H42U, an amazing 3.6v @8.1Amp Hours in a 2.2" Cube!

This is a Brand New, Factory sealed, original equipment battery This is THE SHARP battery not an off brand lower capacity replacement. These are very hard to find and sell for over $100. They provide over twice the power of replacement units. This is a Nickel-Metal, Hydride chemistry for NO MEMORY EFFECT. Design this puppy into your next robot. That's no typo 8100mAH or 8.1 AH! Unbelievable..... but true....true....

**SPECIAL.....$24ea.**

### WOW! THERMAL IMAGER from TEXAS INSTRUMENTS, NIGHTSIGHT 100.

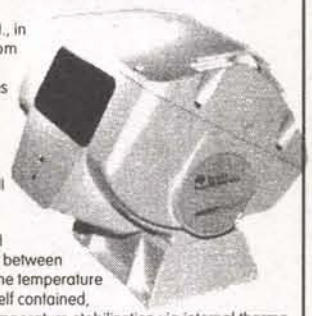

Detects a human sized image at up to 800ft., in complete darkness. Yes,it is tough to hide from a thermal imager. (You have seen them in action on "COPS" This like new unit generates a real time, black and white video output, compatible with any standard monitor or VCR. Unlike "Night Vision" systems which require some available light or added external illumination, the thermal imager will operate in TOTAL darkness. Also ambient lighting such as street lights or bright auto headlamps have no blinding affect. Thermal imagers function by detecting the difference between the background ambient temperature and the temperature of the objects being observed. Completely self contained, apply 12VDC and it works. Specifications: Temperature stabilization via internal thermo-electric cooler. FOV 27H x 18V degrees, Power required: 12VDC @2Amps max., Video output standard NTSC/Composite, Auto brightness and contrast, Selectable image polarity, <30 seconds from turn on to operation. Operating temp. range: -40 to +122F. Waterproof package is only 8"H x 7.4"W x 8"D. Weight: 6.5 lbs. FANTASTIC don't miss out.

**Regular Price >$8500, SPECIAL, NIGHTSIGHT 100.....$5549ea.**

### WORLDS SMALLEST *** 100mW *** VIDEO TRANSMITTER, ON SALE

Incredibly only 0.9" x 0.8" x 0.37" Transmits crystal controlled hi-res. images with 100mW output! The transmitter you've been waiting for. Shown actual size. Much smaller than the 9V battery which powers it. Draws only 35mA! Factory tuned. Receive on cable channel 59. Will work with color or B&W cameras. UHF Bow tie antenna with balun and 3' F cable for TV included. Perfect with our GM1000A. **SPECIAL TVX-100..$159 with GM1000A CAMERA..$209**

### FABULOUS LINEAR SLIDE from Star Linear Systems,

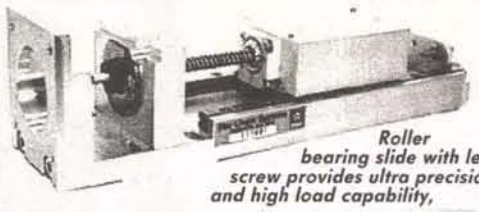

Roller bearing slide with lead screw provides ultra precision and high load capability,

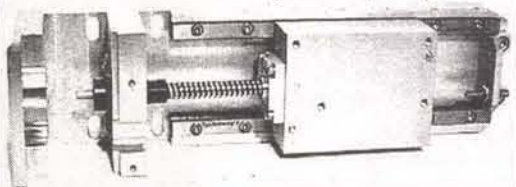

BRAND NEW. Built for accuracy and strength. Each beautifully machined unit weighs in at a hefty 3.5 pounds. The travel is up to 3.4 inches. The dual Tychoway type 'P' roller ways are six inches long and mounted on the 2.6"H x 0.8H x 10.3"L solid, machined aluminum base. The massive 3"L x 2.25"W x 1.1"H carriage block is mounted to dual, low profile, roller bearing carriages. Size: 0.75"W x 2.8"L x 0.3"H. The carriage is moti-vated with a precision 10TPI x 0.3" diam. lead screw. Each end of which is ball bearing mounted and pre loaded for a completely zero backlash, zero play system The end plate is pre drilled for a standard size 23 motor. The lead screw drive end is reduced to o.185" diameter. The overall finish is superb and protected with clear anodizing. Linear accy is 0.0001" per inch off travel, max. Bi directional repeatability is 0.0004" per inch. Vertical and horizontal straightness is 0.0004". This is one of the best looking and performing units we have seen in a long time. Limited qty available. **STAR106...$99ea.**

### NEW, THERMO ELECTRIC MODULES, TECA type 960-127, Single Stage

Brand New, solid state thermoelectric modules. Silent, compact & reliable. Thermoelectrics require no maintenance & can heat by reversing the input. No load cooling to - 42°F with the hot side at 77°F. No vibration or noise operates in any orientation. Specs.: Max^T=66°C @ 27°C, Max current, 3 Amps, Max voltage, 15.4V. For best efficiency and smaller heat sink, derate voltage and current to 75% Size: 1.18" L x 1.18"W x 0.142"H. **SPECIAL.....$8ea. or 4 for $29**

### HYGIENE ANALYSIS SYSTEM, A VERY UNIQUE DEVICE. Biotrace, Uni-Lite®XCEL,

The Most Advanced, State Of The Art, Luminometer Available! Utilizing advanced photon counting techniques and state of the art electronics immediate field determination of contamination levels. This award winning, PC-compatible (RS232 cable and software not included) system enables hygiene analysis with test results to identify emerging trends. Developed by Biotrace's team of engineers and microbiologists, Uni-Lite®XCEL, used in conjunction with the Clean-Trace™ and Aqua-Trace™ (not supplied) , is considered the most advanced rapid cleanliness testing system in the world. How Does The Uni-Lite®XCEL Work? Reagents are based on the measurement of adenosine triphosphate (ATP) - the energy molecule of all animal, vegetable, bacteria, yeast and mould cells. Food residues are also rich in ATP and provide nutrients for microorganisms to grow. When ATP is brought into contact with the firefly reagent luciferin/luciferase, a reaction takes place, which results in the production of light. This light is then measured in a Biotrace luminometer. Biotrace instruments simply measure this light output. The higher the hygiene risk present the more light is produced! Simply insert the sample, close the chamber and measure! Applications include: Determine the cleanliness of surfaces in food and beverage plants, supermarkets, restaurants etc. Monitor efficiency of biocides. Detect contamination in water samples in the paper and pulp industry, water treatment industry and other water applications. Detect contamination in filterable beverages. Carry out research projects. System can be used with all Biotrace reagents such as the Clean-Trace™ rapid cleanliness test, the Aqua-Trace™ rapid water test, the Bev-Trace™ filterable beverage test and any of the Multi-Trace™ kits. All available from Biotrace. Uni-Lite® XCEL's Main Features: • Simple operation • Data Management and Trend Analysis • Multilingual • Lightweight • Windows® connectivity • Easy to follo scroll screens. Display via an internal, 128 x 64 LCD, Hard copy via an internal thermal printer. (Uses std. 2.2" wide rolls) Easy menu driven operation via only four buttons. Power required: external 5VDC. System able to use snap in, NICAD pack not supplied. Size: 6.25"W x 8.25"H x 4.4"D All accessories available from Biotrace. Units are slightly used. Guaranteed to power up and initialize only. We cannot warrant their biological performance. **LTD. QTY. SPECIAL.....$229EA.**

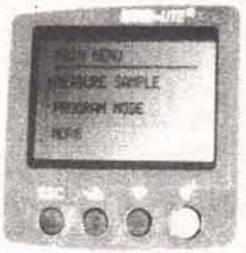


lcd screen view

### TEKTRONIX 2465, 4 Chan., 300MHz, O'Scope, With on screen waveform stats

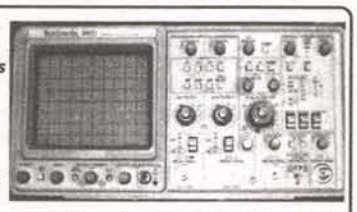

One of the most popular & powerful scopes available at a reasonable cost. Features: 500ps/Div sweep, 2mV/Div vertical sensitivity, 1Mohm / 50-ohm input, 500Mhz trigger bandwidth, four channels. On-screen waveform cursors provide vert. & horiz. scale factors, trigger level, voltage, time, freq., phase, ratio values and mode indication. Complete with 2 probes, and manual. Excellent condition. 90 day warranty. **Very Ltd. Qty.....$2195.**

### ULTRA MINI and WEATHERPROOF, "LIPSTICK"

Sleek black anodized, alum. housing, O-Ring sealed & RAINPROOF. Adj. tilting mount. 1/3" CCD, 380 Lines, 0.3 Lux, AGC, Auto Shutter. 9-12VDC @100mA, 4mm, f1.8, 78° FOV real glass lens, NTSC video. <1ounce! IR SENSITIVE. 23mmdX50mm, 36" cable with BNC video & DC barrel jack. GM-200K, PINHOLE Model. So tiny you can install it directly into a door. Only a 0.9" diameter hole! Specs as above. 90° FOV Pinhole lens. 1/2 once! Size only 23mm d.x35mm long. Think of the places you could put this little jewel.

**LOOK! SPECIAL PRICE, GM-200KSTD..$69**
**LOOK! SPECIAL PRICE, GM-200KPH....$69**

### NEW, "COLOR STEALTH CAM", MICRO SIZE, with AUDIO!

That's right! COLOR! In the same size package too! Sleek aluminum housing fits like a glove! Removeable mtg. bracket & a 1.3M cable with BNC vid., RCA aud., (internal mic) & DC pwr. jack for, no sweat hook up. Why fool around with an open P.C. board? Now you can have the "COLOR STEALTH CAM"

- 1/3" • 350 Lines
- 0.7 Lux • AGC
- Auto Shutter
- Pwr. 6-12V @30mA
- 270k pixels
- Std. 7 mm, 56° FOV lens
- Focus:10mm to inf.
- NTSC video
- 1<ounce!
- Size: 31mm sq. x 28mm d.

**GM-4000S-STD w/audio SPECIAL $89ea**

### B & W "STEALTH CAM", MICRO SIZE, with AUDIO!

The sleek aluminum housing fits like a glove! Removeable mtg. bracket & a 1.3M cable with BNC vid., RCA aud., (internal mic) & DC pwr. jack for, no sweat hook up. Why fool around with an open P.C. board? Now you can have the "STEALTH CAM"•1/3" CCD •410 Lines•0.3 Lux• AGC•Auto Shutter• Pwr. 12V @110mA•250k pixels•Std. 4mm, 78° FOV lens•Pinhole, 90° FOV• Focus:10mm to inf.•NTSC video•<ounce!•IR SENSITIVE•Size Std: 30mm sq. x 29mm d. PH: 16mm d, Don't confuse with LOW RES., HIGH LUX C-MOS CAMERAS. ***GM-2000S-STANDARD OR PINHOLE,*** **SPECIAL...$69ea.**

### NOW YOU CAN SEE WHAT THE "FISHES ARE DOIN' (down 60 ft.) UNDERWATER B&W CAMERA with INTERNAL, INFRA-RED ILLUMINATOR!

Sleek black anodized, BRASS, housing. O-Ring sealed & WATERPROOF. Adjustabe mount incl. Specs: 1/3" CCD, 400 Lines res., 0.05 Lux sensitivity, AGC, Auto Shutter. 12VDC @225mA, 4mm, 78° FOV lens, A real glass lens. NTSC video out. Superior construction. SENSITIVE to IR. Ultra small Size only: 1.25"diam. X 2" long. With 60 ft. cable. Perfect as a remote aresa inspection camera. Great for general outdoor use as well. **GM-300KIR.....$179**

### NEW! NOW YOU HAVE COLOR (down to 60 ft.) UNDERWATER.

**Built-in WHITE LIGHT LED'S,** Sleek black anodized, BRASS, housing. O-Ring sealed & WATERPROOF. Adjustabe mount incl. Specs: 1/4" CCD, 350 Lines res., 0.5 Lux sensitivity, AGC, Auto Shutter. 12VDC @120mA, 4mm, 78° FOV lens, A real glass lens. NTSC video out. Superior construction. Ultra small Size only: 1.25"diam. X 2" long. With 60 ft. cable. Perfect as a remote area inspection camera. Now with six super bright, white LED'S! BRAND NEW,

**GM-400KW-LED.....$219ea.**

### END FIELD of VIEW GUESSWORK! 3.5 to 8mm VARI-FOCAL LENS

Brand New, super f1.8 lens allows you to smoothly adjust from a 97° FOV @ 3.5mm to a 44° FOV @ 8mm. Now you can frame your area of interest just the way you want it! Standard CS-Mount with adjustable focus and iris. **SPECIAL.....$79ea. or 2 for $149**

### SUPER, MINI C-MOUNT CAMERAS, Super sensitive, GM410 or the general purpose GM412,

The GM-412 specs: B&W, size 1.5"sq. X 2.4"L, 250,000 Pixels, 380 Lines Resolution, Sensitivity 0.3 Lux, The GM410 specs: size only 1.5" SQ. x 1.6"L, >270,000 Pixels, 410 Lines Res., Sens. 0.05 LUX., Both

cameras are 1/3" CCD with AGC & Electronic shutter. 12V @110mA power. NTSC out. IR SENSITIVE, BNC video out, Both use std. DC pwr. jack. Aluminum housings with dual threaded top and bottom mounting. True performance not hype! These cameras will outperform *ANY* camera in this magazine. Multi- lens options are available to exploit their superior performance. GM412 shown bottom. GM410 shown top. Prices are less c-mout lens.

**GM412.....$99, GM410.....$169**

### C-MOUNT LENS OPTIONS:

| | | |
|---|---|---|
| LOW LIGHT: | 16mm, f1.6, 15° FOV | $39ea. |
| | 8mm, f1.3, 40° FOV | $49ea. |
| | 4mm, f1.4, 78° FOV | $49ea. |
| STANDARD: | 4mm, f2.0, 80° FOV | $24ea. |
| | 6mm, f2.0, 60° FOV | $24ea. |
| | 8mm, f2.0, 40° FOV | $24ea. |
| | 12mm, f2.0, 28° FOV | $24ea. |

### NEW! Low Cost MICRO CAMERAS,

1/3" CCD, 410 Lines Res., 0.3 Lux sens., AGC, Auto Shutter. Pwr. from 9 to 12VDC @100mA, 250k PIXELS, Std. model, 4mm, 78° FOV lens, Pinhole, 90° FOV. A real glass lens. Both focus from 10mm to infinity. Std. NTSC video out. 1/2 ounce! SENSITIVE to IR. Size Std: 1.25"sq. x 1"d. PH is 0.6"d, 1.6M long wiring harness with connectors included. WARNING: Don't confuse these models with LOW RESOLUTION, HIGH LUX C-MOS CAMERAS.

**GM-1000A-STD.....$59ea.**
**GM-1000A-PH.....$59ea.**
**GM-1000A-CMNT..$59ea.**

### Micro Lenses for GM1000 series

**2.5mm, 150°, FOV, f2.0 ....$22ea.**
**8.0mm, 40°, FOV, f2.0....$22ea.**
**4.3mm, 78°, FOV, f1.8....$22ea.**
**6.0mm, 60°, FOV, f2.0....$22ea.**
**5.0mm, 70°, FOV, PH.....$22ea.**

### 6V@12AH SEALED, RECHARGEABLE,

New Panasonic, LCR6V12PI. Tough to get at a discount. Very compact. Two top mounted 1/4" faston connectors. Perfect for high drain projects. Size: 5.9"L x 3.7"H x 1.9"D

**2 for $20, or 10 for $89**

### NEW, GM960 TIME LAPSE VIDEO RECORDER

Finally a brand new, 4 head, T/L recorder with all the features at a price you can afford. Features: • Up to 960 hours on a standard T-120 VHS tape • 12 different modes for record and playback • Audio recording in the 12H and 24H mode. • 30Day memory backup • Easy mode setting.• On- screen menus • Auto-Repeat recording mode • Serial or One-shot recording • Time, Date, speed, and Alarm indicators on screen. These deluxe units are front loading and are 14"W x 3.5"H x 12.2"D, 110VAC powered. **SALE, GM960-VCR .....$459ea.**

### CO2, 120Watt CW, SEALED GLASS LASER HEADS Integral Hard Sealed Mirrors, NEW!

High quality water cooled heads. Were originally designed for medical application. All models are similar in construction. Size of the model 103: 60"L x 3.2"diam., Model 160: 44"L x 3.2"diam. Model 135: 35"L x 3.2"diam. Power requirement, model 103, 40KV trigger with 25KV @ 10 to 30ma operating current. Model 160 and 135, 30KV trigger with 15-20KV @ 7 to 20mA operating current. These are not toys. They must conform to Class IV CDRH regulations when assembled into a functioning system. Perfect for engraving, cutting and drilling most materials. Only three available. Only one 200W system. We don't expect any more.

**Special 200W dual tube head with metal housing & dual power supply.....$4395.**
**Limited Quamtity.....100+Watts.....$1475., 35Watts.....$895.**

### NEW! LCD COLOR, TFT, ACTIVE MATRIX DISPLAY Offers a super 5.6" VIEWABLE AREA, Pro System with Custom Case, BUILT-IN 12V GEL CELL, all A/V cables and charger. Super Deal.

Pro System with Custom Case, BUILT-IN 12V GEL CELL, all A/V cables & charger. Super Deal. Finally we found a unit with exceptional quality at an affordable price. Perfect as a portable, general purpose color monitor for standard NTSC color or B&W video systems. Fully compatible with all our cameras as well as Camcorders, VCR's etc. Perfect as a rear view system with any video camera by virtue of its built in, mirror image function. Completely enclosed unit has adjustments for color, contrast, brightness & volume, for it's internal stereo speakers! A 1/4 x 20 Tripod socket & a tilt down stand for table top viewing. Inputs include: audio (L&R) and video on std. 1/8" mini jacks. External 12VDC on std. barrel connector. Specifications: 5.6", TFT active matrix LCD with 76.8K Pixels, CCFL backlight with 270cd/m Luminance, 500mW audio output available on std. 1/8" jack. 12V@600mA powered, 50mV min. or std. line level audio input. Size: 6.4"W x 5.25"H x 2.2D" First quality. Pro model includes: A luggage quality, custom made, padded case, dual removable straps for shoulder and/or holding at waist level for hands free viewing Built into the case is a 12V Gel Cell, rechargeable battery plus a complete set of A/V cables. AC power adapter, power switch & charger. **GMTFT56-PRO $344ea. GMTFT56 Display only $299ea.**

SECURE ON-LINE ORDERING
WWW.RESUNLTD4U.COM
RESOURCES UN-LTD.
VISA, MC, AMEX, DISCOVER, COD, ON-LINE
ORDER: 800-810-4070 TECH:LINE 603-668-2499
FAX: 603-644-7825 EMAIL sales@resunltd4u.com
300 BEDFORD STREET , MANCHESTER, NH 03101



Write in 95 on Reader Service Card.

# BUILD AN ELECTRONIC SOLAR-POWERED DIGITAL BAROMETER

**by Anthony J. Caristi**

We all watch weather reports on TV, and are aware that the current barometric reading is usually specified. To some of us, this weather-related parameter might be a mystery, but it need not be if you build this electronic barometer which will easily outperform even the most expensive aneroid barometer you are likely to buy.

Additionally, this instrument requires no external power source. It is powered by solar energy, and will operate very nicely under artificial light, as well. The resolution of the digital display is 0.01 inches of mercury, which is far greater than what could be obtained from an analog barometer.

A barometer measures absolute ambient air pressure, usually specified in inches of mercury. At sea level, under standard conditions set by the World Meteorological Organization, the accepted absolute air pressure is equal to 29.91216 inches of mercury.

This translates to 14.696 pounds per square inch absolute (PSIA). The actual level of air pressure is always changing, and such movements provide an excellent method of predicting the weather.

**One important aspect of the barometric reading is the direction of change: rising or falling.**

For example, if the barometric reading is rising or at high levels, good weather is generally ahead. Conversely, if the reading is falling or low, one can expect stormy conditions. Normal pressure readings fall within the range of 29 to 31 inches of mercury.

One important aspect of the barometric reading is the direction of change: rising or falling. The electronic barometer described here has a "hold" feature, which allows the present reading to be frozen. Then, at a later time, a new reading may be taken. The change of direction will therefore signify if there is a rising or falling condition. The new reading may then be frozen until another check of the pressure is made.

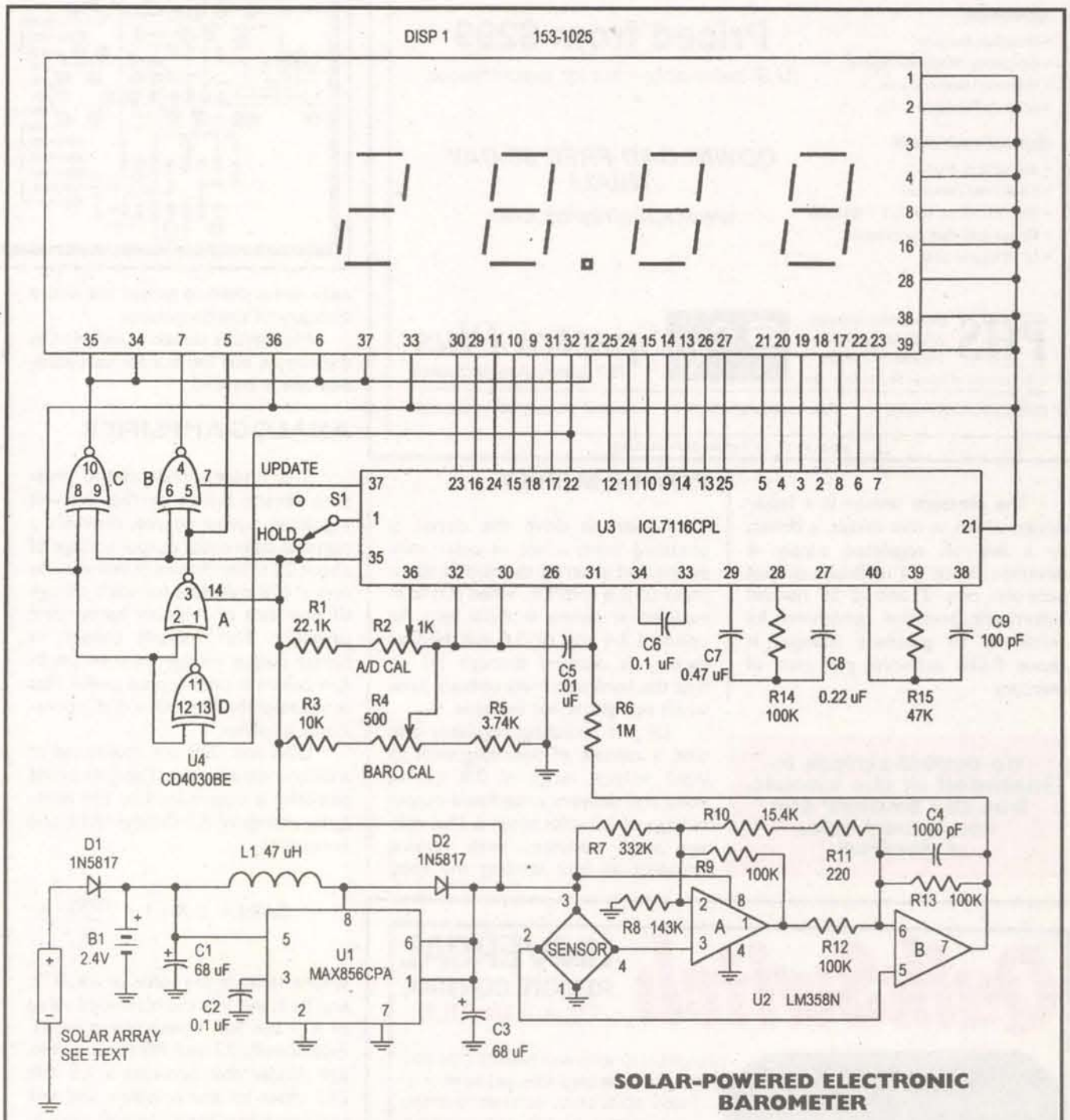


**SOLAR-POWERED ELECTRONIC BAROMETER**

## ABOUT THE CIRCUIT

Refer to the schematic diagram. The heart of the electronic barometer is an absolute pressure sensor that has a detection range of zero to 15 PSIA. This piezo-electric device is composed of four resistors implanted on a silicon substrate, which acts as a diaphragm. One side of the substrate is exposed to a chamber that has been totally evacuated to an almost perfect vacuum. The other side is exposed to ambient air pressure.

The four resistors, normally equal in value, are connected in a Wheatstone bridge configuration. The substrate is physically stressed by the action of ambient air pressure on one side pushing against the zero pressure chamber on the other. As a result, two of the resistors have increased resistance, while the other two are lower than normal. This produces an unbalanced bridge and the output voltage — taken between pins 2 and 4 of the sensor — represents the actual absolute value of air pressure (and barometric reading).

## Turn Your Multimedia PC into a Powerful Real-Time Audio Spectrum Analyzer

***Features***

- 20 kHz real-time bandwith
- Fast 32 bit executable
- Dual channel analysis
- High Resolution FFT
- Octave Analysis
- THD, THD+N, SNR measurements
- Signal Generation
- Triggering, Decimation
- Transfer Functions, Coherence
- Time Series, Spectrum Phase, and 3-D Surface plots
- Real-Time Recording and Post-Processing modes

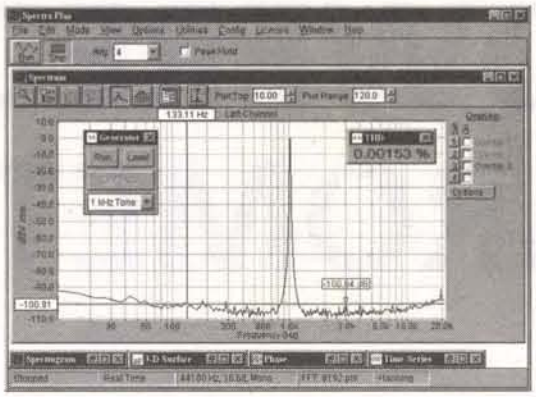

***Applications***

- Distortion Analysis
- Frequency Response Testing
- Vibration Measurements
- Acoustic Research

***System Requirements***

- 486 CPU or greater
- 8 MB RAM minimum
- Win. 95, NT, or Win. 3.1 + Win.32s
- Mouse and Math coprocessor
- 16 bit sound card

**Priced from $299**

*(U.S. sales only – not for export/resale)*

***DOWNLOAD FREE 30 DAY TRIAL!***

*www.spectraplus.com*

PHS Pioneer Hill Software
24460 Mason Rd.
Poulsbo, WA 98370
*a subsidiary of Sound Technology, Inc.*

Spectra Plus
*FFT Spectral Analysis System*

*Sales: (360) 697-3472* *Fax: (360) 697-7717* *e-mail: pioneer@telebyte.com*

**Write in 77 on Reader Service Card.**


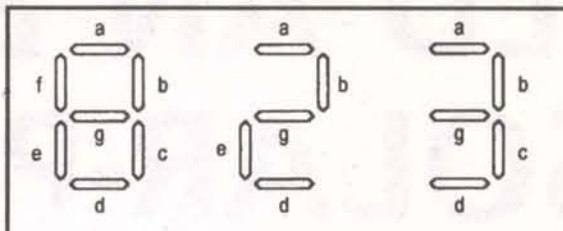


**FIGURE 1**

ILLUSTRATION OF SEGMENT IDENTIFICATION OF THE DISPLAY DIGITS. U4 IS USED TO PROVIDE PROPER LOGIC LEVELS TO THE SEGMENTS OF THE MOST SIGNIFICANT DIGIT WHICH MUST BE A 2 OR A 3.

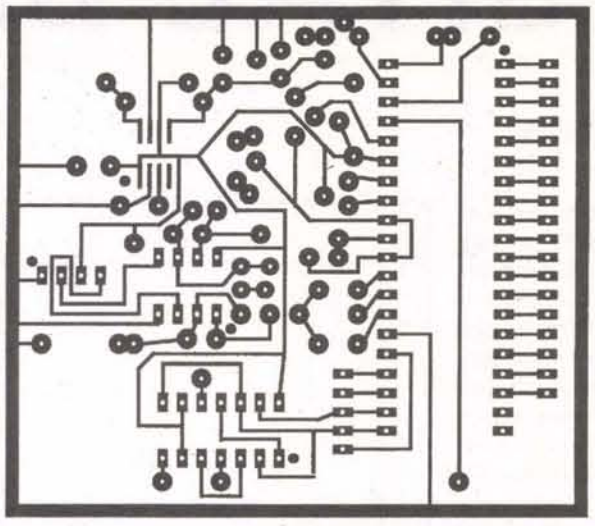

**FIGURE 2**

PRINTED LAYOUT OF THE ANALOG BOARD SHOWN FULL SIZE AS SEEN FROM THE COPPER SIDE.

The pressure sensor is a linear device which, in this circuit, is driven by a five-volt regulated supply. It develops about 20 millivolts output between pins 2 and 4 at normal barometric pressure conditions. Its sensitivity to pressure changes is about 0.678 millivolts per inch of mercury.

**No On/Off switch is included in the circuit, but the builder can easily add one, if desired.**

## POWER SUPPLY

Power to drive the circuit is obtained from a set of solar cells connected in series to provide about three to five volts DC when placed in sunlight or strong artificial light. An optional 2.4 volt or 3.6 volt Ni-Cad battery is charged through D1 so that the barometer will operate even when sunlight is not available.

U1 is a switching regulator chip that is capable of operating with an input voltage range of 0.8 to five volts, and delivers a regulated output voltage of 5.0 volts at pin 6. This voltage stays constant with varying amounts of light striking the solar cells, and is used to power the entire circuitry of the barometer.

No On/Off switch is included in the circuit, but the builder can easily add one, if desired.

## ANALOG AMPLIFIER

The bridge circuit of the pressure sensor, driven by the five-volt regulated power source, provides a nominal differential output voltage of about 20 millivolts which will vary by only 0.678 millivolts for each change of one inch of mercury barometric pressure. This minute change in bridge output voltage must be amplified before it can become useful. This is accomplished by U2, a dual operational amplifier.

U2A and U2B are connected as a differential amplifier. The gain of the amplifier is determined by the resistance values of R7 through R13, and is equal to

$$\text{GAIN} = 2 \times \{ 1 + \frac{100K}{R} \}$$

where 100K is the value of R9, R12, and R13, and R is the combined value of R10 and R11 connected in series. Additionally, R7 and R8 form a voltage divider that provides a 1.5 volt DC offset to the amplifier, and this resistance pair has a Thevinin equivalent of 100K to match R9, R12, and R13.

Using the voltage gain expression shown above with the resistor values shown in the schematic diagram, the gain of the amplifier is 14.8. With a sensor output voltage swing of 0.678 millivolts for each one inch of mercury change in air pressure, it can be seen that the output voltage of the amplifier will change 10 millivolts for each inch of mercury. The actual output voltage of the amplifier will be 1.5 volts as provided by offset resistors R7 and R8, plus the bridge differential output voltage multiplied by the gain of the amplifier. Normal output is about 1.8 volts at pin 7 of U2.

## ANALOG-TO-DIGITAL CONVERTER

U3 and its associated components form a complete 3-1/2 digit voltage measurement system that drives a liquid crystal display (LCD). Only the three least significant digits are used. The half digit, "1," is not required since the barometer must display either a "2" or "3" as its most significant digit. A special driver circuit (U4) is used to accomplish this.

The analog voltage input to U3 is applied to positive input terminal 31 through isolation resistor R6. The negative analog input of U3, terminal 30, is driven by potentiometer R4 which acts as a calibrating adjustment. This takes into account variations in pressure sensors, and allows the display to be set to the correct barometric pressure reading as determined from a known, accurate source.

The sensitivity of the A/D converter is determined by the reference voltage appearing between pins 32 and 36. In this circuit, it is necessary that the A/D converter has a full scale (1999) sensitivity of 199.9 (200) millivolts. This is accomplished by using potentiometer R2 to set the reference voltage to 100 millivolts (0.100 volts).

With a reference voltage of 100 millivolts, U3 will generate a display of 1,000 when its differential analog input voltage is equal to 100 milli-


**QuikSwitch** UNIVERSAL REMOTE CONTROL TV A/B SWITCH

√ CONTROLLED WITH ANY REMOTE CONTROL!
√ RUNS A YEAR ON 2 AA's, NEEDS NO A.C.!
√ 100% SOLID STATE, NOTHING TO BREAK!
√ SUPER-HIGH ISOLATION AND SHIELDING!

Thanks to its patented remote-control receiver, QuikSwitch gives virtually any TV/VCR/CABLE/SAT remote the power to switch between A & B video sources! Switching is done simply by holding down any button on any infrared remote for 2 seconds. A button such as "0" or "STOP" is used, one that won't change the TV/VCR/etc. Red & green LEDs indicate A/B status. QuikSwitch is simply the best R.F. A/B switch ever made, both in convenience AND quality! Try one and see!

**$20** 2 or more $18 each
S & H just $4 per shipment
12 units $15 each

*PATENTS FOR SALE OR LICENSE*
These U.S. patents cover ANY type of switch that utilizes the above control method! Multi-function capability for lamp dimmers, ceiling fans, A/V, etc!

Next Day Shipping - 30 Day Money Back Guarantee - One Year Warranty
VISA MILESTONE PRODUCTS 800-831-0184 MasterCard
Email or Fax Orders Welcome - milestonep@earthlink.net 614-891-3029

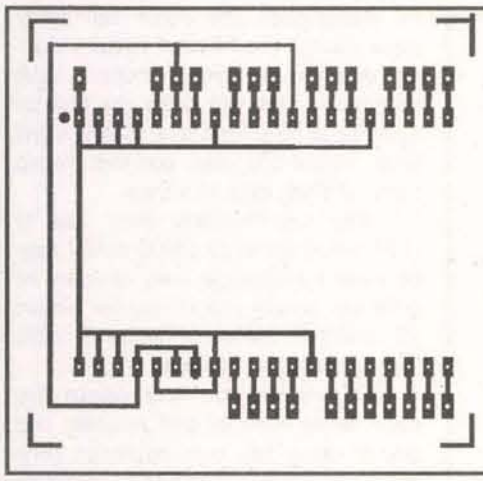

**FIGURE 3**

PRINTED LAYOUT OF THE DISPLAY BOARD SHOWN FULL SIZE AS SEEN FROM THE COPPER SIDE.

volts. Moreover, a positive or negative change of 10 millivolts as caused by a change of one inch in the barometric pressure will cause the generated display to be either 1,100 or 900, respectively.

Thus, it can be seen that for barometric pressure levels ranging from 28.00 to 31.00 inches in one-inch increments, the three least significant digits of the display will be 8.00, 9.00, 0.00, and 1.00 when the decimal annunciator (pin 12) is hard-wired for a display resolution of 0.01 inches of mercury.

## MOST SIGNIFICANT DIGIT GENERATION

Since it is necessary that the range of the barometer display cover the range of 28.00 inches to 31.99 inches, the most significant digit is required to be either a 2 or a 3. A clever one-chip quad exclusive OR circuit (U4) is used to generate the proper digit. An exclusive OR gate produces a logic 1 output only when its inputs are at opposite logic levels.

Each of the digits of the display are composed of seven segments, identified by the letters a through g. See Figure 1. The key to generating a 2 or a 3 is by examination of the "g" segment of the second most significant digit. If that segment is active because the digit is 8 or 9, the most significant digit must therefore be a 2. If the second most significant digit is a 0 or 1, its g segment is inactive and the most significant digit must therefore be a 3.

The LCD is operated by a squarewave backplane signal generated at U3 pin 21 that is applied to the common terminal, pin 1, of the display. Any segment of the display will be extinguished when it is driven by the backplane waveform, and activated when it is driven by the same waveform that has been inverted 180 degrees.

U4C is used as an inverter that activates the most significant digit segments that are common to a 2 or a 3. These are a, b, d, and g. The inverted backplane signal at pin 10 of U4C is hard-wired to pins 35, 34, 6, 37, and 12 of the LCD to permanently illuminate those segments, plus the decimal point.

Segment f of the most significant digit is never activated; therefore, pin 36 of the LCD is connected directly to backplane.

U4D simultaneously examines the g segment of the second most significant digit of the display, and the backplane waveform. When the g segment is active (for digit 8 or digit 9), the output of U4D pin 11 is high. Otherwise, it is low for digits 0 and 1.

U4A is used as a conditional inverter so that its output is identical to backplane when the secondmost significant digit is 0 or 1, and inverted when the digit is an 8 or 9. U4A feeds the "e" segment of the most significant digit of the display (pin 5) to illuminate part of the 2 digit, and it also feeds one input of inverter U4B. The "c" segment of the most significant digit is driven by U4B so that it will

## SOURCES OF SUPPLY

Display & other components: **Digi-Key, 800-344-4539**

Solar cells: **Edmund Scientific Co., Barrington, NJ, 609-573-6250**

Solar cells: **Herbach & Rademan, Moorestown, NJ, 1 800-802-0422**

Pressure sensor: **Newark Electronics, 1 800-4-NEWARK**

*The following parts are available from*
**A. Caristi, 69 White Pond Road, Waldwick, NJ 07463**

Set of two etched and drilled PC boards @ $19.50, pressure sensor @ $29.75, U1 @ $6.75, U2 @ $4.75, U3 @ $3.00, U4 @ $13.75, set of 10 metal film resistors @ $4.50.
Please add $5.00 postage/handling.


# Go Wireless With Our Modules

## SILRX/TXM

The TXM and SILRX modules are a transmitter and receiver pair which can achieve a one-way radio data link-up to a distance of 200m over open ground.

Both units are supplied in space-saving single-in-line packages and offer SAW controlled, wide band FM transmission/reception.

The modules are particularly suited to battery-powered, portable applications where low power and small size are critical design criteria.

## TX2/RX2

The TX2 and RX2 radio transmitter and receiver pair enable the simple implementation of a data link at up to 40kbit/s at distances up to 75m in-building and 300m open ground. Both modules combine full screening with extensive internal filtering to ensure EMC compliance by minimizing spurious radiations and susceptibilities. The TX2 and RX2 modules will suit one-to-one and multinode wireless links in applications including car and building security, EPOS and inventory tracking, remote industrial process monitoring, and computer networking. Because of their small size and low power requirements, both modules are ideal for use in portable, battery-powered applications such as hand-held terminals.

**We now also offer long range SPREAD SPECTRUM, FREQUENCY HOPPING RF MODULES IN 900 MHz and 2.4 GHz**

## RPC

The RPC module is an intelligent transceiver which enables a radio network link to be simply implemented between a number of digital devices. The module combines an RF circuit with processor-intensive low-level packet formatting and recovery functionality, requiring only a simple antenna and 5V supply to operate with a microcontroller or a PC.

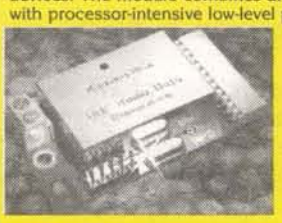

## BiM

The BiM module integrates a low-power UHF FM transmitter and matching superhet receiver together with data recovery and TX/RX change over circuits to provide a low-cost solution to implementing a bi-directional short-range radio data link.

***Lemos International Co., Inc.***
**65 Southbridge Street, Auburn, MA 01501**
**Phone (508) 798-5004 ♦ Fax (508) 798-4782**
**www.lemosint.com ♦ sales@lemosint.com**
***All products available in either 418 or 433 MHz***

Write in 79 on Reader Service Card.

# Digital Storage Oscilloscopes
## From $99.00

**ATC modules** turn your PC into a full-function DSC, spectrum analyzer, logger, & DVM. Units DC to 50MHz. O-Scope II now in Windows 3.1, 95/98, NT and DOS.

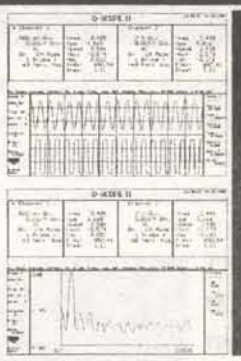

| | |
|---|---|
| **O-Scope Ip** | **$189.** |
| **O-Scope II** | **$349.** |
| **Specialty probes** | **call.** |

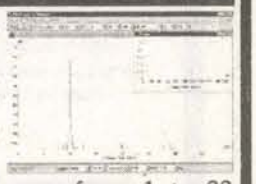

ATC is a stocking distributor for Pico Technology LTD which offers scope modules to 100MSPS, resolutions from 8 to 16 bit.

Pico offers PC based data loggers from 1 to 22 channels, 8 to 16 bit and the Enviromon environmental monitoring system.

**Pico products - call**

The DFA-5, **low cost differential amplifier,** cuts through common mode noise problems to reveal low voltage signals. With gains from 1X to 1000X and band widths from 20KHz to 1.2MHz, DFA-5 is the test accessory to help you work with signals from 5 Volts to 5 microVoltes. Only $129.00.

NEW DFA5

**Serial Port Problems ? ? ?** Check out **Serial ! !** Our lowcost serial channel analyzer only $99.00.

**Allison Technology Corporation**
**2006 Finney Vallet Rd., TX. 77471 U.S.A.**
**800-980-9806 or 281-239-8500**
**http://www.atcweb.com atc@accesscomm.net**

CEI
CABLE WHOLESALERS

NEW VIEWMASTER 4000

$45

MINIMUM 10 LOT

Call for our other cable products

Dealers Wanted
*Call Toll Free*
1-866-814-6703

Se habla Español

www.ceicable.com

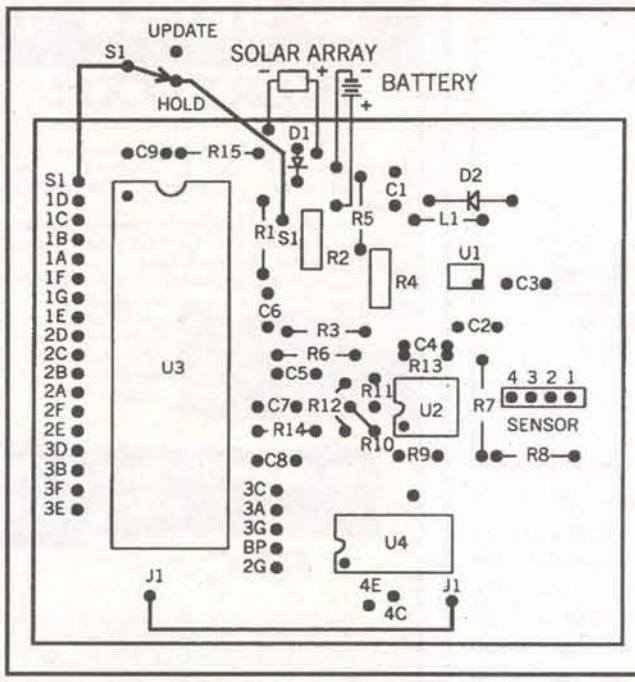


**FIGURE 4**

PARTS PLACEMENT OF THE ANALOG BOARD AS SEEN FROM THE COMPONENT SIDE. NOTE: U1 IS PLACED ON THE COPPER SIDE OF THE BOARD. ONE JUMPER WIRE, J1, IS REQUIRED.

always be opposite to the "e" segment.

The logic circuit of U4 always generates the correct most significant digit of the barometric reading, but cannot produce any digit other than a 2 or a 3.

## MEMORY FEATURE OF THE BAROMETER

U3 normally updates its reading about three times a second in response to changes in the differential analog input voltage fed to pin 31. However, it is designed with a hold feature that allows the display reading to be frozen. This allows the user to store the current reading and update it at any time to provide information as to the trend of the barometric pressure: rising, steady, or falling. This is accomplished by operating S1, the Hold/Update switch.

## SOLAR CELL SELECTION

Before constructing the barometer, it would be prudent to determine the size of the desired solar cell array, which will determine the size of a suitable enclosure. Single solar cells and arrays are available from many electronics parts houses, two of which are listed in the sidebar.

A solar cell typically generates just under 1/2 volt in full sunlight, and one measuring 5 mm x 20 mm is capable of supplying 25 milliamperes. This is more than enough capacity for the circuit. Current capability of a solar cell is directly proportional to its area.

The barometer circuit is operational over an input voltage range of about 1 to 5 volts, with the input current inversely proportional to the voltage. At 2.4 volts, the circuit will draw about 13 milliamperes. More current is required at lower voltages; less at higher input voltages. Note that the switching regulator chip may require up to 2.4 volts to start, but once activated, it will regulate with an input voltage down to less than one volt.

Additionally, the Ni-Cad battery will need a source voltage of at least three volts to ensure some charging current under bright light conditions. Thus, the minimum requirement for a solar cell array is six cells connected in series when using a 2.4 volt battery.

Depending upon the lighting conditions of the desired location of the barometer, the builder may choose more solar capacity by connecting additional cells in series and/or parallel. Remember, the solar cell array must charge the Ni-Cad battery during daylight or strong artificial light conditions. This will allow the unit to operate at zero light level during night time hours. Do not connect more than 10 solar cells in series.

Any size Ni-Cads from size N (150 mAh) up to D (4000 mAh) may be used for storage. Fully charged N cells can power the circuit for about 10 hours in darkness, while D cells will operate for 11 days.

Of course, you may delete the solar array entirely, and operate the circuit using any two batteries (dry cell or Ni-Cad) connected in series to provide at least 2.4 volts. Alternatively, a common wall adapter transformer, with a well filtered output voltage of 2.4 to 4.5 volts DC, can also be used to power the circuit.

## CONSTRUCTION

The circuitry of the barometer is contained on two single sided printed circuit assemblies called the analog board and display board. The analog board contains the pressure sensor, amplifier, A/D converter, and power supply. The display board contains the LCD module.

The two boards are mounted inside a suitable enclosure which has been cut out with a rectangular opening for the display module. The Ni-Cads are secured inside the enclosure and the solar array is placed on top for maximum exposure to light. The only operating control is the Hold/Update switch.

Full size layouts of the printed wiring of the two boards are illustrated in Figures 2 and 3. The circuit is not critical and, if desired, it may be hardwired on a perfboard, using good construction techniques. If you do not wish to etch your own boards, a source of supply is specified in the Parts List.

**Before constructing the barometer, it would be prudent to determine the size of the desired solar cell array.**

Figure 4 illustrates the parts placement of the analog board as seen from the top or component side. When placing polarized components into the board, be sure they are properly oriented as shown. Just one part placed backwards in the circuit will render the barometer inoperative, and may cause damage to one or more components.

Sockets may be used for U2, U3, and U4, and the display module. To make a socket for the display, cut a 40-pin DIP socket in half. The use of sockets permits ease of service should it ever be necessary.

The location of U1 is depicted in Figure 4, but note that this component must be soldered to the copper side of the board. To do this, first

Serial in, graphics out.
**Almost *too* easy.**

These serial displays take RS-232 at 2400 or 9600 baud and produce stunning text and graphics on a supertwist LCD screen. See our complete line at www.seetron.com. All models are in stock for immediate delivery.

***G12032***
***120x32-pixel LCD***
SGX-120L ***$99.00***
Same size as 2x16 text LCD
Editable font(s) in 4 sizes
Up to 6 screens in EEPROM
Easy terminal protocol

(3.2 x 1.4 in.)

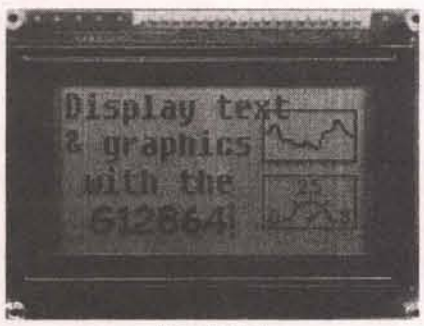


(3.7 x 2.8 in.)

***G12864***
***128x64-pixel LCD***
***$199.00*** BGX-128L-I
Large, sharp LCD
Editable font(s)
Up to 14 screens in flash
Separate text, graphics layers
DB9 connector built in
AC adapter jack built in
Easy terminal protocol

**www.seetron.com**
Scott Edwards Electronics, Inc. ph 520-459-4802 fx 520-459-0623 nnv@seetron.com



Write in 76 on Reader Service Card.

locate pin 1 of the chip, which is usually identified by a small dot. Pin 1 of the chip will be located at the lower left hand corner when viewing the IC from the top side with the legend facing you so you can read it. Then locate pin 1 of the copper foil, which is also indicated by a small dot. Use the following procedure:

**1.** Place the chip in position so that it is centered on the foil pattern with all terminals directly over the copper foil pads.

**2.** Gently solder just one corner pin with a small, pointed soldering iron tip. Do not use too much heat or too much solder; to do so may cause the foil pattern to lift off the board.

**3.** Examine each terminal of the chip and verify that all are located directly over the foil pads. Make any adjustments, if necessary, or remove the chip and repeat step 1.

**4.** When all terminals are properly positioned, solder them in place. Examine the chip for short circuits between terminals. Correct if necessary.

The analog circuitry contains several 1% precision metal film resistors to ensure accuracy and stability. Ordinary carbon resistors are not temperature stable and should not be substituted for metal film types where specified.

Be very careful when handling the pressure sensor. Note that pin 1 is identified by a notch on the terminal, and be sure to follow Figure 4 when placing it into the board.

Handle the glass LCD module carefully. Refer to Figure 5 which shows how this component is placed into the display PC board. Proper orientation is indicated by a small boss at one end of the module.

When both printed circuit boards are completed, examine each of them very carefully for opens, short circuits, and bad solder connections which may appear as dull blobs of solder. Any solder joint which is suspect should be redone by removing the old solder with desoldering braid, cleaning the joint, and carefully applying new solder. It is far easier to correct problems at this stage rather than later on if you discover that your barometer does not work.

## BATTERY

The builder has the option of deleting the battery and D1 if sufficient light — such as from florescent or incandescent lamps — is available at all times to operate the instrument. When deleting the battery, be sure that no greater than 10 solar cells connected in series are used to power the barometer. Maximum allowable input voltage to the switching regulator chip is five volts.

When a built-in battery is not used, the memory feature of the instrument will be temporarily lost if illumination falls below the minimum required to power the unit.

## BOARD INTERCONNECTIONS

Note that Figures 4 and 5 serve to identify the location of the various connections between the two boards. Use insulated stranded #22 or #24 gauge wire. Do not use solid wire — it will break.

Make the interconnections carefully as you follow the schematic diagram. A wiring error here will result in a completely blank display, or one with deformed digits.

## ENCLOSURE

Obtain an enclosure that is large enough to hold all the required components, including the solar array. Cut a rectangular opening for the display, and secure the boards with suitable screws, nuts, and spacers.

**FIGURE 5**

TOP VIEW OF THE DISPLAY BOARD SHOWING LOCATION OF HARD-WIRE CONNECTIONS TO THE ANALOG BOARD.

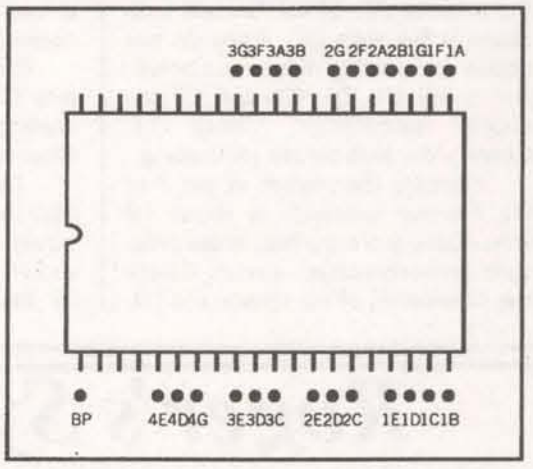


The Hold/Update switch may be mounted at any convenient location on the enclosure. Refer to the schematic diagram, and Figure 4, when wiring this component to the circuit. A power On/Off switch is optional and, if included, should be connected in series with the positive side of the battery.

Secure the solar cell array to the top of the enclosure, which has been drilled for the positive and negative leads of the array. Using RTV silicone adhesive is a good method for installation.

Do not wire or assemble the Ni-Cad cells into the enclosure at this time. This will be done later during the preliminary checkout procedure. When the barometer is fully assembled except for the battery, examine the wiring very carefully for proper connections. Do not attempt the checkout procedure unless you are satisfied that the assembly and wiring are 100% correct.

## PRELIMINARY TEST

CAUTION: If the Ni-Cad cells have any charge, you must be extremely careful not to cause an accidental short circuit. Ni-Cads can deliver very heavy currents into a short circuit. Should this occur, board traces can vaporize and connecting wires can get extremely hot.

A DVM is required to test and calibrate the unit. Before installing the battery, measure the resistance between the power input terminals of the analog board, +2.4 volts, and ground, to be sure there is no short circuit. Normal indication, with the positive lead of the DVM connected to the positive side of C1, is essentially high resistance (about 10K). If zero or low resistance is measured, examine the circuit assembly very carefully to locate and correct the fault.

Connect the two Ni-Cads in series (positive to negative), then wire the two-cell battery to the circuit being very careful to observe proper polarity as indicated in the schematic diagram. If the battery is totally discharged, you may place the barometer in direct sunlight for a while to store sufficient energy to operate the circuit. Alternatively, the Ni-Cads may be charged from a DC power supply, by passing a current through them, equal to 1/10 the ampere hour capacity. This may be done for a period of one or two hours for a partial charge.

Measure the terminal voltage of the battery. Normal indication is 2.4 volts or more. Measure the voltage —

## PARTS LIST

**B1** Two Ni-Cad cells connected in series (see text)

**C1, C3** 68 uFd 25-volt radial electrolytic capacitor

**C2, C6** 0.1 uFd 50-volt ceramic disc capacitor

**C4** 1000 pF 50-volt ceramic disc capacitor

**C5** 0.01 uFd 50-volt ceramic disc capacitor

**C7** 0.47 uFd 50-volt ceramic or metallized film capacitor

**C8** 0.22 uFd 50-volt ceramic or metallized film capacitor

**D1, D2** 1N5817 Schottky diode

**Display** Digi-Key 153-1025

**L1** 47 microhenry inductor, Digi-Key M7833-ND or similar

**R1** 22.1K 1/4 watt 1% metal film resistor

**R2** 1K cermet potentiometer, PC mount

**R3** 10K 1/4 watt 1% metal film resistor

**R4** 500 ohm cermet pot, PC mount

**R5** 3.74K 1/4 watt 1% metal film resistor

**R6** 1 Megohm 1/4 watt carbon resistor

**R7** 332K 1/4 watt 1% metal film resistor

**R8** 143K 1/4 watt 1% metal film resistor

**R9, R11, R12, R13** 100K 1/4 watt 1% metal film resistor

**R10** 15.4K 1/4 watt 1% metal film resistor

**R11** 220 ohm 1/4 watt carbon resistor

**R14** 100K 1/4 watt carbon resistor

**S1** SPST toggle or slide switch

**S2** SPST toggle or slide switch (optional, see text)

**Sensor** Motorola MPX2100A, 15 PSI Absolute

**U1** Switching regulator, Maxim MAX856CSA

**U2** Dual operational amplifier, LM358N

**U3** Quad 2 input exclusive OR gate, CD4030BE

**U4** A/D converter/LCD driver Maxim ICL7116CPL

**Misc.** Solar cell array (see text), enclosure

PARTS LIST

with respect to circuit common — at the positive side of C3. Normal indication is five volts DC. If you do not obtain this reading, disconnect power and check U1, D2, C1, and C3 for proper orientation. Check L1. Correct the fault before proceeding.

Measure the voltage at pin 7 of U2. Normal indication is about 1.8 volts. If not, there is a fault in the pressure sensor/amplifier circuit. Check the orientation of the sensor, and U2. Check the values of resistors R7 through R13. Look for bad solder connections, and try a new chip.

Measure the voltage between pins 32 and 36 of U3. Adjust R2 for a reading of 100 millivolts (0.1 volts). Once set, do not readjust R2 again.

The display should show a four-digit reading with a decimal point. By slowly adjusting R4 over its range, you should be able to see a display of digits that vary from about 29.00 to 31.00 inches of mercury with the decimal point properly illuminated. Set R4 for the proper barometric reading as obtained from a weather report or another barometer that is known to be extremely accurate. If an airport is located nearby, the control tower can provide you with an accurate current barometric pressure reading.

Check the operation of the Hold/Update switch. In the Update position, the display will change with barometric pressure. Allow sufficient time for the reading to change. Note: It is normal for the digital display to sometimes switch back and forth 0.01 or 0.02 inches. With S1 set to the Hold position, the reading should remain constant, despite changes in the barometric pressure.

**Should the display ever go blank, recharge the battery by placing the barometer in bright sunlight for a few hours.**

Once R4 is properly set and S1 checked, the barometer test and calibration procedure is completed.

If the display has deformed digits, it may be caused by a wiring error between the display and analog board or a short or open in the wiring. The location of the deformed digit(s) will tell you where to look for the problem. Refer to the schematic diagram and Figure 1, and check each interconnecting wire with an ohmmeter after disconnecting power to the circuit.

If the display is totally blank, check the orientation of U3, and check all components associated with it. If possible, check pin 21 of U3 and pin 1 of the display with an oscilloscope to verify the presence of the squarewave backplane signal.

Verify the reference voltage of U3 by measuring the voltage between pins 36 (positive) and 32 (negative). Normal indication is 0.1 volt. If incorrect, check R1 and R2.

If the most significant digit is not a 2 or a 3 as it should be, check the orientation of U4. Check the circuit for shorts or opens, and try a new chip.

## FINAL ASSEMBLY

The Ni-Cads may be fastened at a convenient location in the enclosure using RTV silicone rubber, or any other appropriate method. The boards are similarly secured in the desired location. Once the assembly is completed, the barometer may be placed in full sunlight for a couple of hours to charge the battery.

## USING THE BAROMETER

S1 is normally left in the Update position so that the barometer will show the existing pressure level. However, the Hold position may be selected at any time to freeze the reading until a new reading is taken, by switching to the Update position of the switch. This way, the trend of the barometric reading, rising or falling, may be determined.

Remember, the barometer should be placed at a location of bright light during daytime hours to keep a trickle charge on the battery. Should the display ever go blank, recharge the battery by placing the barometer in bright sunlight for a few hours. **NV**


# Roger's Systems Specialist

(800)366-0579
(661)295-5577
fax(661)295-8777

24895 Avenue Rockefeller
Valencia California 91355
" We Have Great Connections "
Computer • Telecommunications
Network • Audio • Video

Log on and see our Newly Updated **WebSite** sign-up to receive a catalog!

w w w . r o g e r s s y s t e m s . c o m

## Motherboards

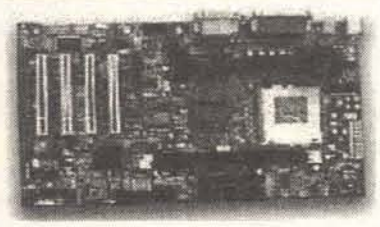

**Delta 810 Chipset**
**Slot 1 and Socket 370**
Onboard Audio and Video • Ultra DMA 33/66 • ATX Form • 2 DIMM slots • 4 PCI • USB • Smart BIOS
MB-M810-A/V.....$89.00

## LVD Cables

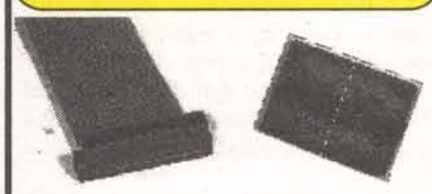

LVD SCSI Ultra2 68 Pin Ribbon...$16.00
LVD Terminator (HD68) Female..$16.00

## IEEE-1394 FIREWIRE

$5.00

FW-6X4-6 6ft 6pin x 4pin.....$5.00
FW-4X4-10 10ft 4pin x 4pin....$12.00

PCI to 1394 Card
Driver • 6pin to 4pin cable
MGI Softare included
**$89.00**

IO-100

**$20.00 min. Order required**
Add $4.50 shipping for prepaid orders
Prices subject to change without notice
All major credit cards accepted
Special offers only valid on items in stock
Call for quantity discount
No out of state checks accepted

## ParkingLot Sale

If you're in **So. California** **STOP** on by our **HUGE Parking Lot Sale** and Open House

Saturday October 7th

8am to 2pm

1000's of Items • Reduced Prices • Closeout Specials
FREE Admission / Parking
FREE Food and Drinks
Merchants showcasing products
Fun and Games • Music
DSL Internet Browsing

## ADD ON CARDS

Call for more information on any of these cards!!

| | |
|---|---|
| CA-PPGA-S1 | PPGA Celeron CPU Slot 1 adaptor..$10.00 |
| IO-398 | ISA 8bit Single Parallel IEEE Card....$12.00 |
| IO-400 | PCI 32bit Single Parallel IEEE Card....$33.75 |
| SD-884 | 16bit ISA Sound Card ESS Chip....$14.00 |
| USB-PCI | USB x PCI Add on Card....$27.00 |
| VD-466 | S-VGA SIS 4MB PCI Video Card....$31.00 |
| VD-488 | Savage4 32MB AGP 12bit 3D Video Card..$99.00 |

## Multi-PC Controller

w/keyboard & mouse emulation
Easy to select by push button

HD15-S-VGA
PS/2 KEYBOARD
PS/2 MOUSE

CC-PS2-VGA6 Cable Kit with this Item $12.00

**DS-HD2-66EM 2-WAY $49.00**
**DS-HD4-66EM 4-WAY $69.00**

## USB HUB

4-port USB hub with power & cable
Full compliance w/USB spec. Rev 1.0.
LED indicator for fault or dummy USB port.
Transmission for 5 meter cable segment.
Plug & Play capability for outside peripherals.
Support UHCI and OHCI spec.
One year factory warranty!
$39.00

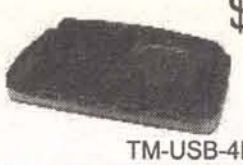

TM-USB-4HUB

## JOYSTICK

**Top Fighter Joystick**

Compatible with IBM PC 386, 486, 586, Compatible with Windows.

TM-JOY.....$7.00

## KEYBOARD DRAWER

TM-KBD-8...$14.95
Desktop K/B Drawer w/Security Heavy Duty

Under Desk
Keyboard Drawer
Mouning Hard-ware included
TM-KBD-1..$10.00

**CPU's-Motherboards-HardDrives Memory -SCSI Adaptors -SCSI Cables CD burners -CD's & Rewritable CD's And Much Much More!!!!!**




Write in 78 on Reader Service Card.

**CALL TOLL FREE**
(800) 292-7711
Orders Only
Se Habla Español

# C&S SALES

**Secure On-line Ordering @ cs-sales.com**

CALL OR WRITE FOR OUR **FREE** 64 PAGE CATALOG!
(800) 445-3201

## Digital Multimeters

### Elenco Model M-1740

**$34.95**

**11 Functions:**
- Freq. to 20MHz
- Cap. to 20µF
- AC/DC Voltage
- AC/DC Current
- Beeper
- Diode Test
- Transistor Test
- Meets UL-1244 safety specs.

**Model M-2760N**
**$19.95**
(9 functions)

### Elenco Model LCR-1810

**$99.95**

- Cap. 0.1pF to 20µF
- Inductance 1µH to 20H
- Resistance 0.01Ω to 2,000MΩ
- Temperature -20°C to 750°C
- DC Volts 0 - 20V
- Freq. up to 15MHz
- Diode/Audible Continuity Test
- Signal Output Function
- 3 1/2 Digit Display

### Elenco Model LCM-1950

**$69.95**

- Large 1" 3 3/4 Digit LCD
- Autoranging Freq. to 4MHz
- Cap. to 400µF
- Inductance to 40H
- Res. to 4,000MΩ
- Logic Test
- Diode & Transistor Test
- Audible Continuity Test

### Fluke 87III

**$319**

Features high performance AC/DC voltage and current measurement, frequency, duty cycle, resistance, conductance, and capacitance measurement.

## Test Equipment

### 10 Function 1.3GHz Universal Counter
### Elenco Model F-1300

**$229.95**

- Frequency .05Hz - 1.3GHz 3 Ranges
- Period - Can read 60Hz to 60.000000 F=1/T
- Totalize - Counts to 199,999,999
- RPM - 3 to 2099994 RPM
- Duty Cycle
- Max/Min/AVG with Time
- Stop-watch set .2 sec. to 100 hrs.
- Math Functions
- Timer - 2 sec. to 99 days
- Pulse Width - 0.1ms to 66666.6ms

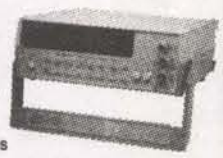

### Elenco 3MHz Sweep Function Generator with built-in 60MHz Frequency Counter
### Model GF-8046

**$195.95**

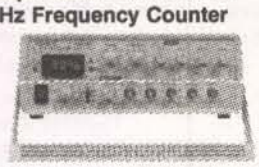

This sweep function generator with counter is an instrument capable of generating square, triangle, and sine waveforms, and TTL, CMOS pulse over a frequency range from 0.5Hz to 3MHz. **GF-8025** - Without Counter **$139.95**

### 20MHz Sweep / Function Generator with Frequency Counter Model 4040

- 0.2Hz to 20MHz
- AM & FM Modulation
- Burst Operation
- External Frequency Counter to 30MHz
- Linear and Log Sweep

| | | |
|---|---|---|
| 21.5MHz Model 4070 | $1295 | **$445** |
| 10MHz Model 4017 | $325 | |
| 5MHz Model 4011 | $255 | BK PRECISION |

### Elenco Handheld Universal Counter 1MHz - 2.8GHz
### Model F-2800

**$99**

**Sensitivity:**
- <1.5mV @ 100MHz
- <5mV @ 250MHz
- <5mV @ 1GHz
- <100mV @ 2.4GHz

Features 10 digit display, 16 segment and RF signal strength bargraph.

Includes antenna, NiCad battery, and AC adapter.

**C-2800** Case w/ Belt Clip.....**$14.95**

### Elenco RF Generator with Counter (100kHz - 150MHz)
### Model SG-9500

**$225**

Features internal AM mod. of 1kHz, RF output 100MV - 35MHz. Audio output 1kHz @ 1V RMS.

**SG-9000** (analog, w/o counter) **$124**

### Elenco Quad Power Supply
### Model XP-581

4 Fully Regulated Power Supplies in 1 Unit

**$85**

4 DC Voltages: *3 fixed;* +5V @ 3A, +12V @ 1A, *1 variable;* 2.5 - 20V @ 2A • Fully Regulated & Short Protected • Voltage & Current Meters • All Metal Case

### Elenco Power Supply
### Model XP-603

**$85**

- 0-30VDC @ 3A Output
- 3A Fused Current Protection
- Current Limiting Short Protection
- 0.025Ω Output Impedance

### Elenco 10Hz - 1MHz Digital Audio Generator
### Model SG-9300

**$225**

Features built-in 150MHz frequency counter, low distortion and sine/square waves.

**SG-9200** (w/o counter) **$124**

## Deluxe Soldering Stations

### Elenco SL-5 Series

Electronically controlled, ideal for professionals, students, and hobbyists. Available in kit form or assembled.

Works w/ any iron! Turn any soldering iron into a variable iron.

**As Low As**
**$29.95**

**Features:**
- Cushion Grip Handle Soldering Iron (optional) with Grounded Tip for Soldering Static-Sensitive Devices. Easily Replacable. Uses Long-Life, Plated Conical Tip.
- Heavy Steel, Non-Slip Base.
- Iron Holder Funnel - Reversible, left or right side.
- Steel Tray for Sponge Pad.
- Sponge Pad.

Quantity Discounts Available

**Ordering Information:**

| | |
|---|---|
| **Model SL-5** - No iron. (Kit SL-5K) | **$29.95** |
| **Model SL-5-40** - Includes 40W UL iron. (Kit SL-5K-40) | **$35.95** |
| **Model SL-5-60** - Includes 60W UL iron. (Kit SL-5K-60) | **$36.95** |

**Limited Time Offer:** *FREE SP-1A Solder Practice Kit w/ Kit Order!*

**Weller WLC-100** - Variable Power Control 5 - 40 watts **$34.95**

### Elenco Model SL-30

**$84.95**

- Tip temperature changeable from 300°F (150°C) to 900°F (480°C).
- Temperature is maintained within +10°F of its preset temperature.
- The tip is isolated from the AC line by a 24V transformer.
- The tip is grounded to eliminate static charges.

**SL-10** - Same as SL-30 w/o digital display **$59.95**

### Weller Model WTCPT
### Controlled Output Soldering Station

- Transformer powered soldering station complete w/macro style, low voltage, temperature controlled soldering iron.
- PT Series soldering tips come in a variety of shapes and sizes in three standard temperature ranges: 600°F, 700°F, & 800°F.
- 0-24V output - 60 watts.
- Special "closed loop" method of controlling maximum tip temperature.

**$125**

## Elenco Oscilloscopes

### Free Dust Cover and 2 Probes

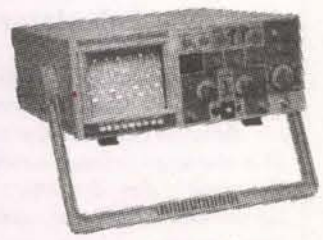

| | | | |
|---|---|---|---|
| **S-1325** 25MHz Dual Trace | $325 | **S-1345** 40MHz Delayed Sweep | $569 |
| **S-1330** 25MHz Delayed Sweep | $439 | **S-1360** 60MHz Delayed Sweep | $725 |
| **S-1340** 40MHz Dual Trace | $475 | **S-1390** 100MHz Delayed Sweep | $895 |

***DIGITAL SCOPE SUPER SPECIALS***

| | | |
|---|---|---|
| **DS-203** | 20MHz/10Ms/s Analog/Digital | $695 |
| **DS-303** | 40MHz/20Ms/s Analog/Digital | $850 |
| **DS-603** | 60MHz/20Ms/s Analog/Digital | $950 |

## Elenco Educational Kits

### Model XK-150
Digital / Analog Trainer

**$89.95**

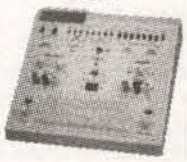

- 830-pin Breadboard
- 8 Data Switches
- 8 LED Buffered Readouts
- Built-in Function Generator (sine and square wave)
- Built-in Clock Generator
- Variable Power Supply +1.25V to 15VDC @ .25A -1.25V to -15VDC @ .25A +5VDC @ .25A +30VAC center-tapped at 15VAC @ .25A

### Model AR-2N6K
2 Meter / 6 Meter Amateur Radio Kit

**$34.95**

### Model AM-780K
Two IC Radio Kit

**$11.95**

### Model AK-700
Pulse/Tone Telephone Kit
Flashing Neon Lights
Great School Project

**$15.95**

### Model AK-870
Radio Control Car Kit

**$24.95**

- Solderless
- 7 Functions
- Transmitter Included

### Model M-1005K
DMM Kit

- Transistor Test
- Diode Test
- Overload Protection
- Pocket Size

**$15.95**

### Model MX-901
Electronic Crystal Radio

**$6.95**

- Solderless!
- No Batteries Req.

## CCTV Cameras

Cameras have 420 lines (360 color) of resolution, 0.08 Lux, 3.6mm/F2 90° field of view. Power requirement is 12VDC @ 100mA (order SC-1).

### MONOCHROME CAMERAS

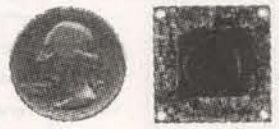

**SC-12** - 35mm Lens (1.25"x1.25")
**$69**

**SC-15** - Pin Lens (1.25"x1.25")
**$69**

Add $10 for lens • Add $10 for audio

### COLOR CAMERAS

**SC-20** Pin Lens
**SC-21** 3.6mm Lens
360 Lines 1.25" x 1.25"
Infrared Sensitive, Audio Included

**$109**

**Accessories:**

| | |
|---|---|
| SC-1 - 12V 100mA adapter | $6.95 |
| SC-2 - 50' cable w/ connectors | $19.95 |

Add $10 for case
Call for complete catalog.

## Guaranteed Lowest Prices

UPS SHIPPING: 48 STATES 5%
OTHERS CALL FOR DETAILS
IL Residents add 8.25% Sales Tax

**SEE US ON THE WEB** → http://www.cs-sales.com

## C&S SALES, INC.

150 W. CARPENTER AVENUE
WHEELING, IL 60090
FAX: (847) 541-9904 (847) 541-0710

**15 DAY MONEY BACK GUARANTEE**

**2 YEAR FACTORY WARRANTY**

PRICES SUBJECT TO CHANGE WITHOUT NOTICE

# AMATEUR ROBOTICS NOTEBOOK

**by Robert Nansel**

This month, I begin a design dialog on what goes into building robots to meet specific requirements. I'm still assimilating the lessons I've learned from my Jiffy robot, so I'm not going to show a 4WD design based on Jiffy just yet. Instead, I'll lead off with what it takes to build an elementary two-wheel drive system for a sumo robot.

Other than two equations, I'm going to keep the discussion mostly qualitative. I find my design cycle tends to alternate between getting a literal hands-on feel for the problem and calculating performance from first principles. If you are a gut-level designer and hate equations, or if you are a math whiz with hundreds of unrealized paper designs, bear with me. You need both approaches to build good robots, if only as a way to check your work. Next month, I'll lean more on the theoretical side.

Finally, I've got a great book on motors to recommend. Let's get started on the sumo design.

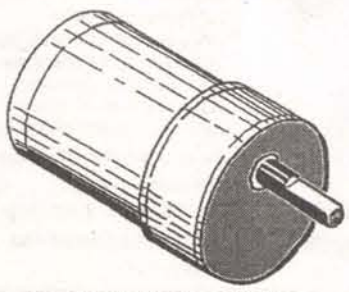

**Figure 1: Barber-Colman Gearmotor**

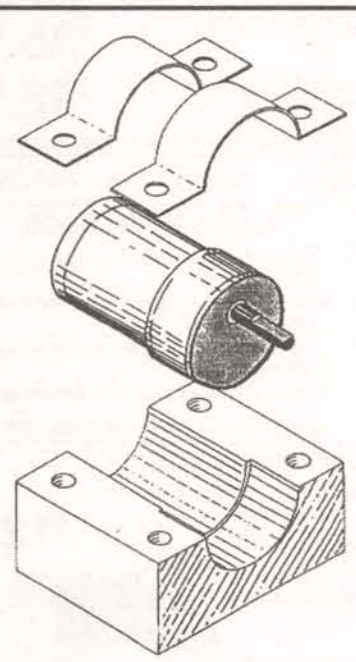

**Figure 2: Pillow Block Motor Mount**

## Applying a Little Muscle

Barber-Colman gearhead motors are plentiful in the surplus market. C & H Sales (www.candhsale.com; see their ad on page 14) sells Barber-Colman #FYQF-63310-9 gearmotors for $17.50 each, new surplus. They are 12 VDC permanent magnet 300 RPM gearheads with 25 in-oz of torque, continuous duty.

Two of these gearheads make a fine start on a sumo 'bot drive system, but they're too fast, and the torque isn't as high as I would like for a sumobot. For a practical sumo wrestler, the wheel RPM should be about 75 RPM for a 3" wheel. A 4:1 speed reducer would give this, with the added bonus of multiplying the torque output by four.

Speed reducers come in hundreds of styles, but most fit within three groups: gear, belt, and worm. I'll dismiss worm drives right away for efficiency sake (worm drives are lucky if they get to be 50% efficient). Gears are very efficient, usually around 99%, but they are expensive, noisy, and hard to adjust.

V-belt drives, on the other hand, are cheap, quiet, and easy to adjust. Also in their favor is the natural shock absorbing elasticity belts give a drive system, something important for drives intended for high-shock sumo wrestling.

They are less efficient than equivalent gear reducers (that shock absorbing elasticity doesn't come for free), but the main problem with ordinary belt drives is that belts can slip, and this could be disastrous for a sumo robot.

The answer is to use a *timing belt* reducer, which combines the best features of V-belts and geartrains. Timing belts are nearly as efficient as gears, have zero backlash, and still offer the ease of adjustment and shock absorbing qualities of belt drives. And they cost less than gears.

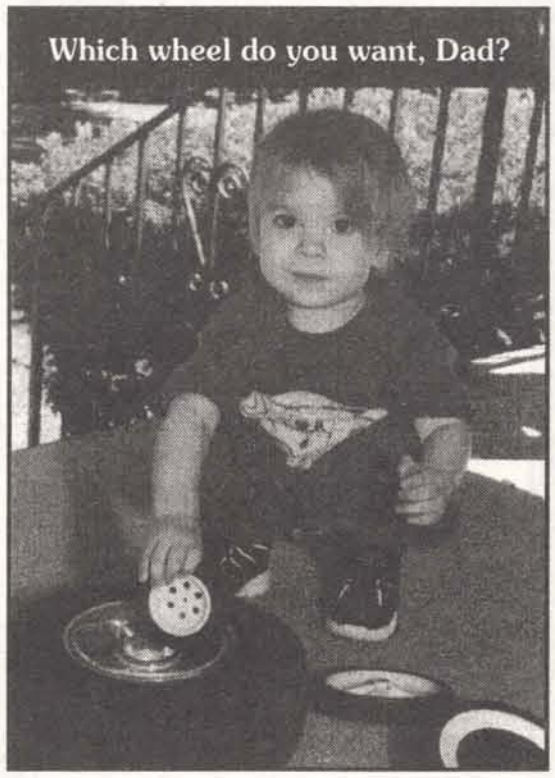


## Time for Reduction

Okay, to get a 4:1 reduction I have to put a small pulley on the output shaft of my gearhead, and a four-times larger diameter pulley on the shaft that drives the robot's wheel. As a rule, the smaller of the two pulleys must have at least six teeth in mesh at any one time to carry its full-rated torque, and since only about half of the teeth of the pulley can ever be in mesh with the belt at one time, that means a 12-groove pulley, minimum. To be on the safe side, I would choose a 15-groove pulley.

The large pulley then must have 4 x 15 = 60 grooves.

But what size belt should I use? For that matter, what pitch (tooth spacing) should the belt and pulleys have?

The wheels of my robot are 3.2 inches (8.13 cm) in diameter, so the 60-groove pulley must be smaller than that.

Oh, and my wheel drive shaft is 0.25 inch (6.35 mm) diameter and the output shaft of the Barber-Colman gearhead measures 0.185 inch (4.7 mm) in diameter.

A quick look through my "Seitz Standard and Special Drive Components" catalog shows that a 60-groove, 0.080 (MXL) pitch pulley has a 1.7 inch (43.19 mm) flange diameter, about right for the wheel I intend to use. It is an "engineered plastic" component made of 10% glass filled polycarbonate, so it should be plenty strong. It's available with an aluminum hub insert bored for my 0.25 inch shaft and it comes in both single and double flange versions.

Flanges keep the timing belt from wandering off the pulleys, a problem for smaller pulleys, so I'll use the double flange versions for both the 60- and 15-groove pulleys (part nos. 0002429 and 000416, $4.74 and $3.48, respectively when I bought them; check Seitz at www.seitzcorp.com for current pricing).

The distance between the gearhead output shaft and the wheel drive shaft will be 2.84" (7.22 cm). With this distance and the pulleys I'm using, I'll need a 110 tooth MXL pitch belt (part no. 0013818, $4.25). How did I know what belt size to use? It's an iterative process.

## Get Your Calculator

First, I figured the belt size knowing **C**, a first best-guess center-to-center distance between the two pulleys; **D** is the large pulley diameter, and **d** is the small pulley diameter. The formulae for belt length and center-to-center distance are:

(1) $\mathbf{L = 2C + 1.57 * (D+d) + (D - d)^2 / (4C)}$

(2) $\mathbf{C = SQRT\ [\ ((2L-3.14 * (D-d)) / 4)^2 - (\ (D - d) / 2\ ))^2\ ]}$

In this case:

**C** = 2.85" (my first guess)
**D** = 1.528"
**d** = 0.382"

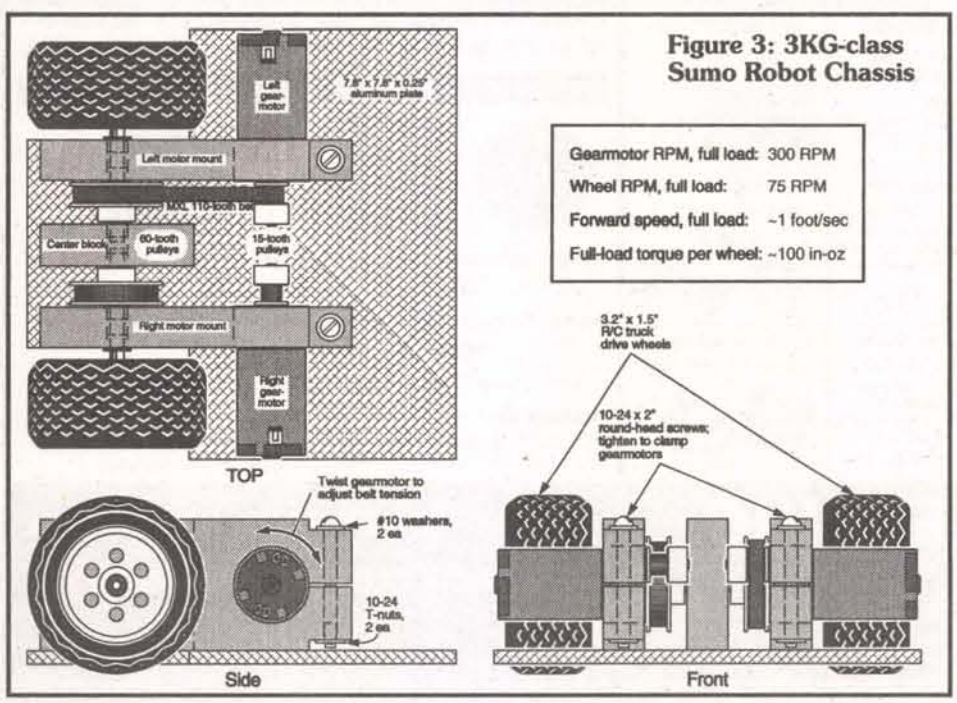


**Figure 3: 3KG-class Sumo Robot Chassis**

Plug-n-chug with the above numbers, and you get **L** = 8.8" (approx.). The 112-tooth belt (#0013822) has an **L** equal to 8.960", and the 110-tooth belt (#0013818) is equal to 8.800".

Next, plugging these numbers back into Equation (2) gives a center-to-center spacing of **C** = 2.9243" for the 112-tooth belt, and **C** = 2.8427" for the 110-tooth belt. I chose the 110-tooth belt, though note that this configuration leaves about 0.65" clearance between the tire and the gearmotor.

This distance could be safely reduced to about 0.15", with a corresponding **C** equal to 2.35" if you want to make a more compact assembly. In that case, you would need to substitute 2.35" for **C** in Equation (1) to solve for the new **L**. You would then locate the nearest corresponding belt size and plug that size into Equation (2) to make sure that the new center-to-center distance is still acceptable.

This works out to **L** = 7.8384", with 8.000" (the 100-tooth belt) being the closest larger size. In turn, this implies **C** = 2.43", which means the actual clearance between tire and motor would be about 0.23". The next belt size down — 97-tooth — has a length of 7.760", which gives a final center spacing of 2.31" and a wheel clearance of about 0.11"... isn't this fun?

Anyway, once I've selected the gearmotors, the wheels, pulleys, and toothed belts, I'm done, right?

Well, these parts can't just float in space. They have to be mounted to the robot.

## Motor Mounts

A *pillow block* is one idea to mount the motor. A pillow block is a cradle with straps designed to hold a motor or bearing rigidly in position (Figure 2). As an experiment, I made pillow blocks for my gearmotors by boring two concentric holes the proper depth in the side of a 2.7" square wood block. The larger bore is 1.375" diameter and .75" deep for the gearhead casing; the smaller bore is 1.25" diameter through the rest of the block for the motor body.

Four transverse holes form the mounts. Sawing down the middle gives two identical pillow blocks, left and right. Secure the gearmotor with sheet metal straps and bolts. Since the output shaft of the gearmotor is off-center, simply twisting the gearmotor tensions the belt.

That works fine for the gearmotor, but what about the wheel drive pulleys? I could have made similar bearing blocks for the wheel shafts, but I might have had some trouble getting — and keeping — the separate blocks in alignment with each other.

I settled on a different design that uses a single block to clamp each gearmotor and mount its wheel shaft bearings, with a third center bearing block (Figures 3 and 4). Now instead of sheet metal straps, I use machine screws and tee-nuts to provide the clamping force to hold the gearmotors in place. The bearings (flange-type, sintered bronze) for the 1/4" drive shafts press fit into 3/8" holes. Notice that the center block is shared by both drive shafts. This gives the wheel shafts much greater stability than just bearings in the motor mount blocks alone could afford.

When the 60-groove pulleys are tightened on their respective shafts, they keep them from sliding in or out, though there should be about 1/32" of play. Accordingly, the ends of the shafts inside the center bearing block must have about 1/16" minimum clearance from each other.

All blocks are made of 3/4" thick, straight-grained rock maple. I secured the motor mount blocks and the center bearing block with countersunk woodscrews through the 1/4" aluminum chassis plate (Figure 4). Those blocks aren't going anywhere.

One tip about mounting the blocks: Before you drill the mounting holes in the blocks, insert the bearings and run a single straight section of 1/4" drive shaft through all three blocks to make sure they are aligned. I pre-drilled and countersunk the holes in the aluminum plate beforehand and clamped the blocks to the plate, making sure that the shaft was still free to turn. Then I used the holes in the aluminum plate as my drilling guide.

Once you screw the blocks in place, there's a chance that the blocks might deform or shift slightly under the tension, and the alignment shaft might not slide out easily. Don't panic. Take a section of 1/4" steel shaft with a flat milled on one side and use it as a reamer to shave away enough of the bearing surfaces until a plain shaft doesn't bind. Pull the flatted section out frequently and wipe away the metal particles.

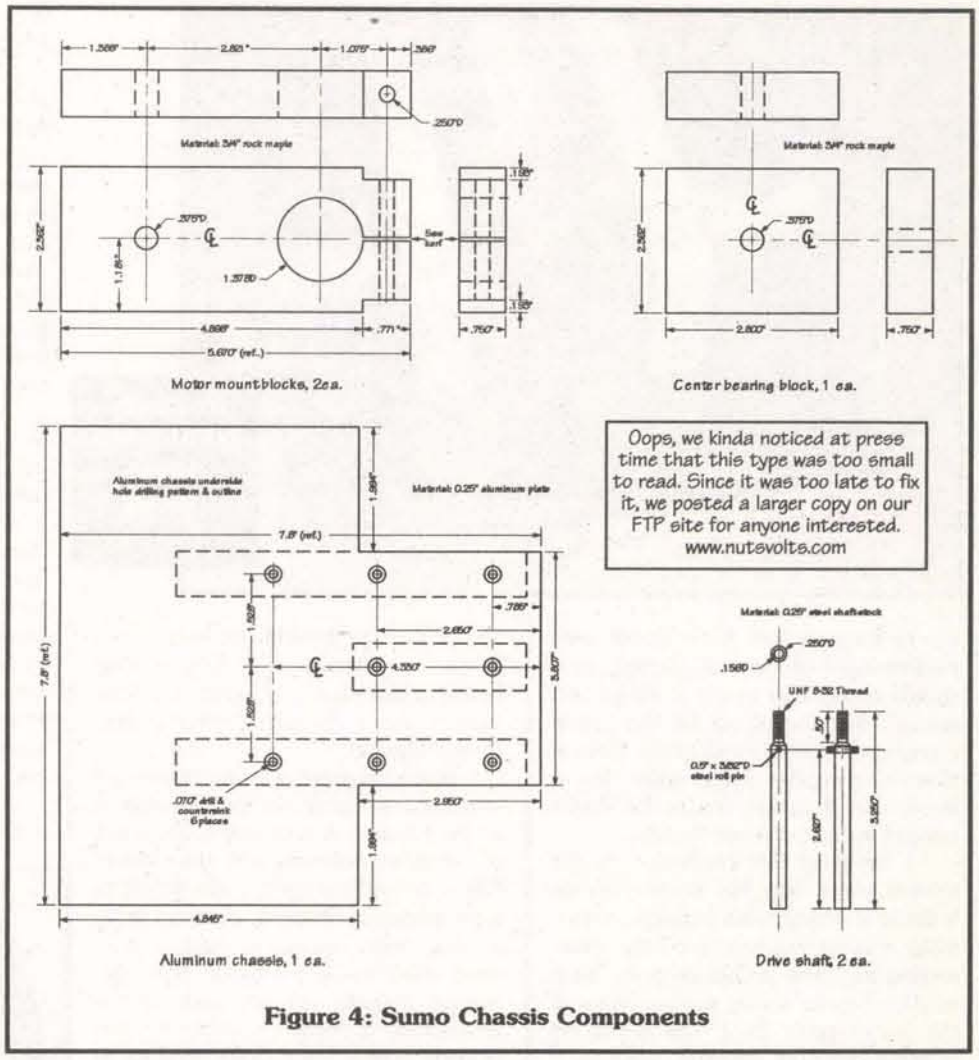


Oops, we kinda noticed at press time that this type was too small to read. Since it was too late to fix it, we posted a larger copy on our FTP site for anyone interested. www.nutsvolts.com

**Figure 4: Sumo Chassis Components**

Once you've got the flatted shaft to turn smoothly by hand, you can chuck it up in a hand drill and perform the same operation at increasing speeds with the hand drill.

A little WD-40 will help in this operation. Don't overdo it, though. If the bearings are enough out of alignment that you need a hammer to get the shaft out, you're better off starting over and remounting the blocks, perhaps with shims of aluminum foil.

## Enough Power Yet?

Without actually competing with other sumobots, there is no easy way to know whether the chassis as presented could overpower another robot sumo opponent. And there's a lot still missing — a caster or skid for the front, a body, a battery, and control electron-


AMAZING DEVICES NVEN800ODD

See and Order from Our "Action" Web Site at www.amazing1.com

**Ion Ray Guns**
Star Wars Technology Directs Energy

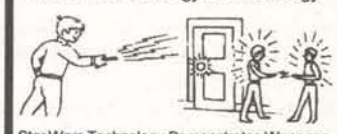

Star Wars Technology Demonstrates Weapons Potential, Force Fields, IonMotors, Antigravity etc. *Projects electric shocks without contact!!* Conduct many weird and bizarre experiments. Handheld battery operated and easy to operate.

IOG7/9 Plans.....$10.00
IOG7K Kit/Plans.....$99.50
IOG70 Assembled/Tested.....$149.95
*Higher Powered Device*
IOG9K Kit/Plans.....$129.95
IOG90 Assembled/Tested.....$199.95

**Mind&Brain Controllers**
**Increditable device** Turbo charges memory, Boost mental powers, Controls stress, Speeds up healing processes and Uncover hidden potentials.

High quality unit with many features.
BWPLUS-APOLLO Ready to use..$179.95
BWII- EINSTEIN Lower cost unit...$129.95

**Electromagnetic Gun**

Propels a ball bearing using a magnetic pulse!
BBGUN1 Plans **Ball Bearing Gun$10.00**

**Cybernetic Ear!**

Provides that "extra edge" for many listening applications. Enhances 3 to 4x of normal.
CYBEREAR.....$19.95

**Mini TESLA Coil**

Lights up a 4' fluorescent tube-all without any contact!! Yet only 3" tall!
MTC1K Kit/Plans.....$24.95
MTC10 Assembled.....$34.95

**Burning Laser Ray Gun**

***Danger:*** Handheld Battery Operated Air Cooled. *Starts Fires Over a Long Distance*
LABURN1 Plans (parts avail).....$20.00

**3 Mi Voice Transmitter**

Crystal clear . Many applications. Easy to build
FMV1 Kit and Plans..$39.95

**Green Laser Ray Gun!**
**Shoots a visible ray of green light**

Hand held produce up to 200 milliwatts of continuous optical power. Generates a bright visible ray of light.
LAGREEN1 Plans (All parts avail).....$15.00

**Green Laser Pointer**

Intense green with visible beam to 6000 feet!! Pen sized. Operates on 2 AAA Batteries. Call for pricing as we will not be undersold!!!

**Anti Gravity Rings**
*Non Magnetic Objects Mysteriously are set in Violent Motion. Distances up to 50 feet!!!*

Objects react to a seemingly negative force where they accelerate and violentally crash into one another. A real mysterious effect!!
GRAVRAY1 Plans (parts available).....$15.00

**Transistorized TESLA Coil**
**JACOB'S Ladder**
**Plasma Tornado**
Turn a light bulb into a spectacular plasma display!! With frequency control. Safe 12vdc input

TCL5 Plans..$8.00 TCL5K Kit/Plans..$59.95
TCL50 Assembled and Tested.....$99.95

**High Energy Pulsers**
Charges up to 16000 J at 1-6Kv.
Lossless Reactive Current Charging.
Triggered Tungsten Spark Switch
Programmable Energy Control

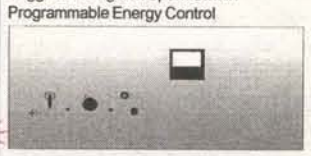

HEP9 Plans.... panel as shown above ....$20.00
HEP90 Assembled.....$649.95
HEP3 Plans 1KJ lower power unit.....$15.00
HEP3K Kit with 500 J storage.....$349.95
HEP30 Assembled above.....$449.95

**Below Projects Include HEP Plans**

RAILGUN1 Plans High Vel Kinetic.....$20.00

*Fires a real projectile! Great Science Project*
EGUN1 Plans Electric Gun.....$20.00
MASS1 Plans Mass Driver/Cannon.....$20.00
CANCRU1 Plans Can Crusher.....$20.00
PPRO1 Plans Electrothermal Gun.....$20.00
EMP1 Plans EMP/HERF Gun.....$20.00
We Stock Parts for all the Above

Information Unlimited PO Box 716 Amherst N.H. U.S.A. 03031
1 800 221 1705 Orders/Catalogs Only! Fax 1 603 672 5406 Information 1 603 673 4730 *Free Catalog on Request*
Pay by MC,VISA,Cash, Check, MO, COD. Add $5.00 S&H plus $5.00 if COD. Overseas Contact for Proforma

Write In 185 on Reader Service Card.

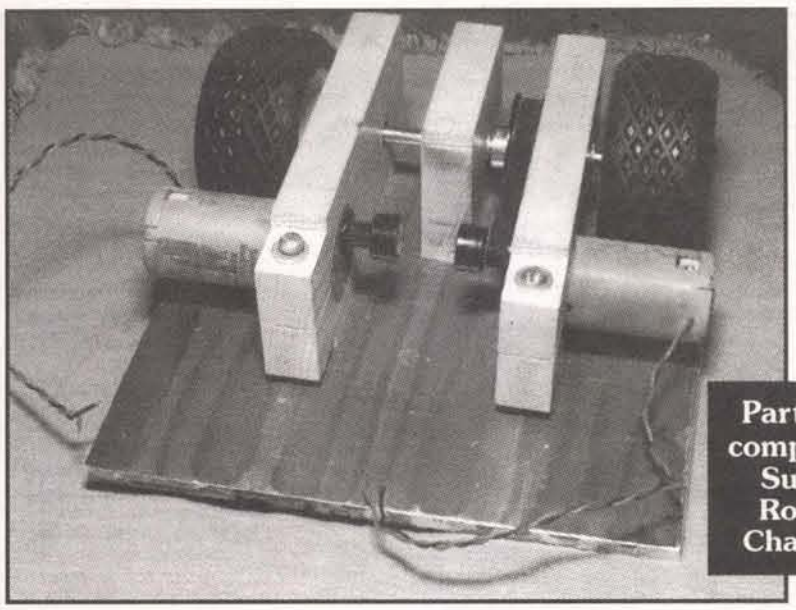

**Partially completed Sumo Robot Chassis.**

ics, to name a few. It's a good, solid mechanical arrangement, though, so it should be enough to get some of you started. See the photo for the nearly completed chassis. Incidentally, there is blue color on the chassis plate that is layout die; it makes the scribe marks needed for layout easier to see.

I designed this particular chassis several years ago but never finished building it. Many robot projects, regrettably, end up this way, but I am resurrecting the more promising ones, such as this. I came across the box with all my sumo parts as I was gathering material for this month's column. I went back through my project notebook where I had recorded all the detailed design steps, but not everything wound up in my notes. This robot, like most I build, came about because I had a particular wheel/motor combination I wanted to try.

What isn't recorded in my notebook are the hours I spent just sitting at my bench hefting those motors, holding them up next to the wheels, and imagining various drive arrangements. To the uninitiated, this would look like "playing," and I suppose it is, in a sense. By spending those hours playing, my hands become intimately familiar with the components and their possibilities. If you don't already have a well-developed mechanical intuition, playing with the parts before you start to build — or even design — your robot can help you strengthen your intuition.

## Roboschlepper

In my rummaging through boxes, I came up with lots of other wheels I've used in past robots. In the photo, my son Yonatan is shown holding the sumobot wheel, and at his feet are some of those other wheels. Yes, the big one really is a wheel to a robot. It's an 11-inch pneumatic go-kart wheel from Azusa Engineering (www.azusaeng.com), one of four wheels for a monster robot called Roboschlepper.

Roboschlepper is for toting around groceries and what not for a person in a wheelchair. It is supposed to be a sort of semi-autonomous cart that would follow behind a person's wheelchair at a programmed distance, perhaps using a color video camera to track a standard slow-moving-vehicle sign (an orange triangle) on the back of the wheelchair. It doesn't need to be particularly bright, but it does need to be able to cope with wheelchair ramps, gravel, uneven pavement, and curb cuts — hence the large wheel size.

The other photo shows the drive motors that would be used for Roboschlepper (on the left) and the sumo 'bot (on the right). The large gearmotor is rated at 1/8 horsepower, with a full-load speed of 167 RPM and torque of 43 in-lbs. A further external 2:1 miter gear reduction brings the F/L RPM down to 83.5 and boosts the torque to 86 in-lb. The robot sumo's performance is naturally much more modest; its motors are only rated at about 7.4 watts mechanical power, a little less than 1/100 horsepower. Roboschlepper's motors give the 230-lb. robot the ability to go up fairly steep wheelchair ramps (1-in-12 slope) at about 2.5 MPH, or 3.7 ft/sec.

How do I know this? Neither of these robots has been completed, so it's not by experimental observation. No, I did some calculations, a handy tool especially for beefy robots. I'll talk in detail next month about the analysis behind all that.

## Electric Motor Handbook

Speaking of beefy robots, do you ever get the urge to build a *really* powerful robot? Something with *muscle*? How about a robot that can climb cliffs or zoom to 2,000 feet on 200 burning amps of raw electric power, yeah, that's what I'm talking about!

Well, if you've ever entertained such notions, here's the book you'll need to make them come true: *Electric Motor Handbook* by Robert J. Boucher (AstroFlight, Inc., Marina Del Ray, 1994, ISBN 0-9644065). It is billed as "The Complete Handbook of High Performance DC Motors," and it is by far the best practical reference on PMDC motors I've seen.

Robert Boucher is the president, co-founder, and chief engineer of AstroFlight. For those of you not familiar with the company, AstroFlight has been a well-known name in the electric-powered modelling business for over 30 years. They sell powerful permanent magnet DC motors for everything from model boats to model airplanes, so their motors are designed to operate efficiently from NiCd battery packs consisting of 6 to 36 cells.

When I say AstroFlight makes *powerful* motors, I mean motors drawing, say, 30 amps at peak efficiency (280 at stall!) and producing about 37 in-oz torque at 12,500 RPM. For the curious, that's over 340 watts of mechanical power, almost 1/2 horsepower, putting even Roboschlepper to shame. (In comparison, the hobbyist servos I used on Jiffy each produce about 42 in-oz torque at about 45 RPM, which works out to less than 1.5 watts, a weensy two thousandths of one horsepower.)

Anyway, the point is that Boucher knows his motors, and in this book he shares that knowledge in no-nonsense language. You'll find over 80 pages packed with equations, charts of motor torque, power, and efficiency curves, and practical methods for calculating or measuring all the important parameters of a given motor.

Don't panic at my mention of equations, because they are all simple algebraic equations, where you plug in the values and get your results ("plug and chug" as we used to call it in college). Boucher doesn't show you how his equations are derived (there are plenty of college texts with all the grisly details). What he does give you is the stuff you really need to know to get the most out of a motor — equations, charts, and graphs along with plenty of worked examples — and you won't need a PhD to understand it.

## The Ideal Motor

Chapter one introduces the Ideal Motor, then walks you through the various loss mechanisms that every motor has — the so-called copper and iron losses are the main ones — then he shows how to calculate motor efficiency. Chapter two is a short rundown of how to measure three critical values used in calculating motor performance — no-load current, motor resistance, and motor voltage constant. Chapter three covers the arcana of commutation timing, how to adjust the brushes of a high-performance motor to minimize brush sparking and wear. Most robots amateurs build use neutrally-timed motors because we want the motors to run equally well forward and backward, so we have to put up with a little sparking. For applications where a motor will always turn the same direction, though, you can get more speed and power by advancing the brush timing a bit.

Chapter four covers airplane propellers, five explains PWM speed control, and chapter six talks about NiCd batteries. The rest of the book, chapters seven through ten, are all about AstroFlight's various motor offerings, including motor constants, performance curves, and mechanical drawings.

If all you ever plan to build are bitty little table-top robots, then you don't really need this book. But, if you have plans for making ozone and burning rubber in Robot Sumo competition — or if you want to build a flying robot — this is definitely the book to get. At $14.95, it'll pay for itself many times over if it prevents you from burning up just one motor. I bought my copy through Fatbrain.com, but you can also find copies in hobby shops that specialize in RC aircraft and boats. If you can find it in the hobby shop, buy it because both Fatbrain and Amazon take four to six weeks to fill orders for this book.

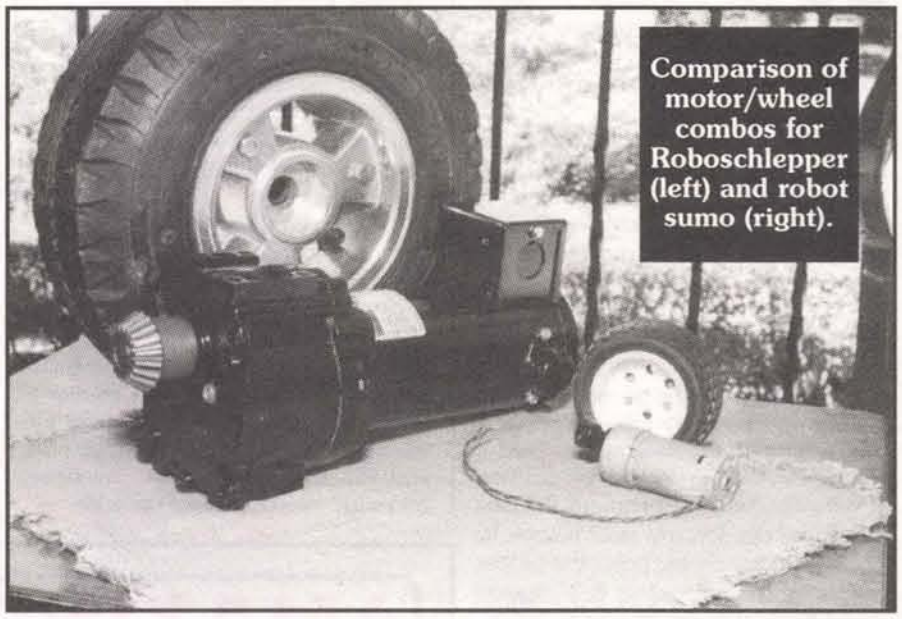

**Comparison of motor/wheel combos for Roboschlepper (left) and robot sumo (right).**

## Wrapping Up

You'll be seeing lots of partial designs in this column in coming months, as well as some complete projects. The partial designs are my attempt to address areas that cause even experienced robot builders to stumble. It's my hope by giving you a lot of partial designs, the more experienced among you will be able to take one or more and run with them. And they serve to illustrate the process for beginners. This month's sumo chassis is one example. I'll also continue with more complete designs that take you all the way through a project. **NV**


If you have suggestions, questions, or comments about amateur robotics topics, you can now reach me at:

Robert Nansel
Box 228
Ambridge, PA 15003

E-Mail: bnansel@nauticom.net

We accept Visa, Mastercard, AmEx, and Discover

# Attention: Nerds–Geeks

Fax: 318-424-9771

To Order Call 1-800-227-3971 www.shrevesystems.com

# Upgrade Your Old Mac!

## LOGIC BOARD BLOWOUT!

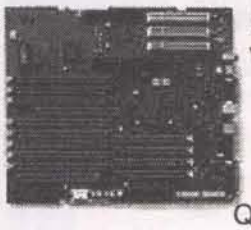

**STARTING AT $99!**

Quadra 610/660 to PM 6100 .....ONLY $99
Quadra 650 to PM 7100/66 .....ONLY $149

## NEW FLOPPY DRIVE BLOWOUT!

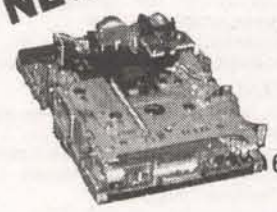

PART # 661-0474

**STARTING AT $19!**

**1.44 SuperDrives**

NO EXCHANGE REQUIRED!

**Be sure to check us out on the web at http://www.shrevesystems.com for the best prices on Vintage Mac gear!**

# MONITOR MADNESS!

19"-21" fixed res 1024 X 768
**ONLY....$49** as is

13"-14" fixed res 640 X 480
**ONLY....$25** as is

15" Radius Pivot
**ONLY....$25** as is

H.P. 17" fixed res 832 X 724
**ONLY....$99** 30 Day Warranty

H.P. 17" fixed res 640 X 480
**ONLY....$99** 30 Day Warranty

16" Rasterops fixed 832 X 624
**ONLY....$99** 30 Day Warranty

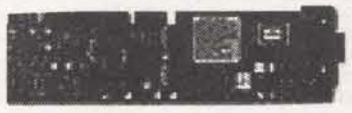

**Global Village Gold** internal Modem 14.4 Com Slot

**ONLY $1**

**Global Village Bronze**
External Modem
2400 Bps/9600 Fax

**ONLY $1**

**Apple Color Composite Display**
Great for Surveillance
**Refurbished $69**

**PAS16 Audio CMS Spectrum**
16 Bit Sound Editing Card **ONLY $19**

**Tower SCSI Case**
Holds 4 5.25 full height drives

**$79**

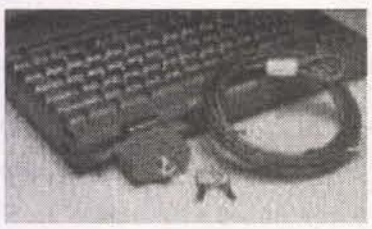

Drive Lock Security System for Portable Computers-protects your data if lost or stolen!
**ONLY.....$5**

**$19**
**Curtis ADB Track Ball**

**Apple Remote Control**
**$5 EACH**

**RAM**
1 MB 30 Pin 4 For $1
4 MB 72 Pin 2 For $5

**Apple II 256K Memory Expansion Kit**
HM51256P-10 **ONLY $1**

**$5**
**PDA Genuine Leather Carry Case**
Let your palm pilot lead the life of luxury!

**Membrane Track Pad for laptop $2**

**Peltier Junction**
with heat sink, works on 5V &12V
1 3/16îx 1 3/16î
**$10 each or 3 for $25**

**$5**
**LC Power Supply**
+5V, -5V, +12V Output

**MacAlly ADB Keyboard**

**$19**

**Miscellaneous**

| | |
|---|---|
| Apple 8 bit Video Card | $19 |
| LaserWriter IINT | $199 |
| Apple ADB Keyboard | $19 |
| 1.44 Super Drive | $19 |
| Clone ADB MouseII | $19 |
| Quicktake 100 Camera | $99 |
| Bernouli 90 MB EXT | $10 |
| 44MB SyQuest Ext | $10 |
| 88MB SyQuest Ext | $19 |

**$25 minimum order**

**Shreve Systems**
1200 Marshall st
Shreveport, La 71101

Returns subject to a 15% restocking fee.
Prices are subject to change without notice. We accept Visa, Mastercard, AmEx, Discover

Write in 100 on Reader Service Card.

# WE BUY AND SELL

WESTERN TEST SYSTEMS

Inquiries **307-635-2269** • Fax **307-635-2291**

Orders **800-538-1493**

2701 Westland Court, Unit B, Cheyenne, Wyoming 82001

## OSCILLOSCOPES & ACCESSORIES

### OSCILLOSCOPES

HP 54100D Dual Channel 1 GHz / 40 MS/s Digitizing Oscilloscope — $875.00
TEK 7104 1 GHz 2-Channel Oscilloscope, w/7A29,7A29-04,7B10,7B15 — $2,000.00

### PROBES

HP 1122A Probe Power Supply — $150.00
TEK 1101 Accessory Power Supply, for FET probes — $175.00
TEK A6902B Voltage Isolator, DC-20 MHz, 20 mV-500 V/div. — $500.00
TEK P6046 100 MHz Differential Probe — $400.00
TEK P6101A pair 1X 34 MHz Probe pair, 10 Megohm/32pF, new in plastic — $50.00
TEK P6201 900 MHz 1X/10X/100X FET Probe — $400.00
TEK P6202 500 MHz 10X FET Probe — $150.00
TEK P6205 750 MHz 10X FET Probe, for TDS series — $325.00
TEK P6701-opt.02 O/E Converter, 450-1050 nm/0-1 mW: DC-700 MHz, ST conn. — $175.00
TEK 067-0587-02 Signal Standardizer Calibration Fixture — $750.00

## WAVEFORM GENERATORS

### FUNCTION

HP 3310A 5 MHz Function Generator — $250.00
HP 3314A-001 Function Generator, 0.001 Hz-19.99 MHz, 30 Vp-p, HPIB — $1,200.00
HP 3325A 21 MHz Synthesized Function Generator, HPIB — $900.00
HP 3325A-002 21 MHz Synthesized Function Generator, HV output option — $1,200.00
TEK AWG5102 Arb.Waveform Gen., 20 MS/s,12 bits,50ppm synthesis <1MHz — $650.00
TEK AWG5105-opt.02 Arbitrary Waveform Generator, dual channel option — $800.00
TEK DD501 Digital Delay & Burst Gen., for function & pulse gen's — $200.00
TEK FG5010 Programmable — $800.00
TEK FG501A 2 MHz Function Generator, TM500 series — $275.00
TEK FG502 11 MHz Function Generator, TM500 series — $275.00
TEK FG503 3 MHz Function Generator, TM500 series — $250.00
TEK RG501 Ramp Generator, TM500 series — $175.00
WAVETEK 288 20 MHz Synthesized Function Generator, GPIB — $650.00

### PULSE

BERKELEY NUCLEONICS 7085B Digital Delay Generator, 0-100 mS, 1 nS res.,5 Hz-5 MHz — $550.00
HP 8007B 100 MHz Pulse Generator — $450.00
HP 8012B 50 MHz Pulse Generator, variable transition time — $500.00
HP 8082A 250 MHz Pulse Generator — $1,250.00
TEK PG502 250 MHz Pulse Generator, Tr<1nS, TM500 series — $500.00
TEK PG508 50 MHz Pulse Generator, TM500 series — $350.00
WAVETEK 802 50 MHz Pulse Generator — $250.00

## VOLTAGE & CURRENT

### VOLTMETERS

FLUKE 845AR High Impedance Voltmeter / Null Detector — $400.00
HP 3456A 6-1/2 Digit Voltmeter, HPIB — $450.00
HP 3478A 5-1/2 digit Multimeter, HPIB — $450.00
KEITHLEY 181 6-1/2 digit Nanovoltmeter, 10 nV sensitivity, GPIB — $800.00
SOLARTRON 7081 8-1/2 digit Voltmeter — $3,000.00
TEK DM5010 4-1/2 digit Multimeter, TM5000 series plug-in — $300.00
TEK DM501A 4-1/2 digit Multimeter, TM500 series plug-in — $225.00

### CALIBRATION

FLUKE 510A AC Reference Standard, 10 VRMS, 0-10 mA — $450.00
FLUKE 515A Portable Calibrator, DC/AC/Ohms, line & battery power — $900.00
FLUKE 5220A Transconductance Amplifier, DC-5 kHz, 0-20 A — $1,900.00

### VOLTAGE SOURCES

HP 6115A Precision Dual Range Power Supply, 50V 0.8A / 100V 0.4A — $750.00
KEITHLEY 228 Programmable Voltage/Current Source — $1,900.00

### CURRENT METERS & SOURCES

HP 6181C DC Current Source, to 100 V, 250 mA — $500.00
HP 6186C DC Current Source, to 300 V, 100 mA — $750.00
TEK CT-5 High Current Transformer for P6021/A6302, to 1000A — $375.00
TEK P6022 AC Current Probe w/termination, 935 Hz-120 MHz, 6 A pk — $250.00

## IMPEDANCE & COMPONENT TEST

### L.C.R.

BOONTON 62AD 1 MHz Inductance Meter, 2-2000 uH — $550.00
BOONTON 72BD 1 MHz Capacitance Meter, 3-1/2 digit display — $650.00
BOONTON 72C 1 MHz Capacitance Meter, 1-3000 pF full scale — $800.00
GR 1658 RLC Digibridge, 120 Hz/ 1 kHz — $1,000.00
GR 1659 RLC Digibridge, 120 Hz/ 1 kHz/ 10 kHz — $1,100.00

### STANDARDS

E.S.I. SR-1 Standard Resistor, various values — $125.00
E.S.I. SR1010 Resistance Transfer Standards, 1 Ohm-100 K/step — $550.00
E.S.I. SR1050-1M Resistance Transfer Standard, 1 Megohm/step — $2,000.00
GENERAL RADIO 1409-SERIES Standard Capacitors — $150.00
GR 1406 Standard Air Capacitors, GR900 connector, 0.1% acc. — $275.00
GR 1432-U 4-Decade Resistor, 0-111.10 Ohms, 0.01 Ohm resolution — $100.00
GR 1433-J 4-Decade Resistor, 0-11,110 Ohms, 1 Ohm resolution — $150.00
GR 1433-K 4-Decade Resistor, 0-1,110 Ohms, 0.1 Ohm resolution — $150.00
GR 1433-L 4-Decade Resistor, 0-111,100 Ohms, 10 Ohms resolution — $150.00
GR 1433-P 5-Decade Resistor, 0-1.1111 Megohm, 10 Ohm resolution — $500.00
GR 1433-X 6-Decade Resistor, to 111,111.0 Ohms, 0.1 Ohm res. — $250.00
HP 4440B 4-Decade Capacitor, 40 pF-1.2 uF — $750.00

### T.D.R.

TEK 1503B-03,04 T.D.R., 0-50,000 ft., chart recorder & battery power — $3,000.00
TEK 1503-opt.04 Time Domain Reflectometer, 0-50,000 feet,chart recorder — $1,400.00

## POWER SUPPLIES

### SINGLE OUTPUT

HP 6110A 0-3000 V 0-6 mA CV/CL Power Supply — $250.00
HP 6207B 0-160 V 0-200 mA CV/CC Power Supply — $200.00
HP 6263B 0-20 V 0-10 A CV/CC Power Supply — $375.00
HP 6266B 0-40 V 0-5 A CV/CC Power Supply — $375.00
HP 6267B 0-40 V 0-10 A CV/CC Power Supply — $550.00
HP 6271B 0-60 V 0-3 A CV/CC Power Supply — $375.00
HP 6274B 0-60 V 0-15 A CV/CC Power Supply — $650.00
HP 6299A 0-100 V 0-750 mA CV/CC Power Supply — $200.00
HP 6384A 4.0-5.5 V at 8 A CV/CL Power Supply — $125.00
HP 6443B 0-120 V 0-2.5 A CV/CC Power Supply — $450.00
HP 6632A System DC Power Supply, 0-20 V, 0-5 A, 100 Watts, HPIB — $750.00
HP 6652A 0-20 V 0-25 A 500 Watt Programmable Power Supply, HPIB — $1,875.00
KEPCO ATE 36-30M 0-36 V 0-30 A CV/CC Power Supply — $900.00
KEPCO ATE 36-8M 0-36 V 0-8 A CV/CC Power Supply — $375.00
LAMBDA LK-352-FM 0-60 V 0-15 A CV/CC Power Supply — $600.00
SORENSON DCR 150-3B 0-150 V 0-3 A CV/CC Power Supply — $500.00
SORENSON DCR 600-0.75B 0-600 V 0-750 mA CV/CC Power Supply — $550.00
SORENSON DCS 40-25 0-40 V 0-25 A CV/CC Power Supply — $650.00
SORENSON SRL 20-12 0-20 V 0-12 A CV/CC Power Supply — $350.00
SORENSON SRL 60-8 0-60 V 0-8 A CV/CC Power Supply — $500.00
TEK PS501-1 Power Supply, 0-20 V, 2 mV res., 400 mA, TM500 series — $175.00

### MULTIPLE OUTPUT

HP 6205C Dual Power Supply, 0-40 V 300 mA & 0-20 V 600 mA, CV/CL — $300.00
HP 6228B Dual 0-50 V 0-1 A CV/CC Power Supply — $375.00
HP 6236B Triple Output Power Supply, +/- 0-20V 0.5A & 0-6V 2.5A — $375.00
HP 6253A Dual 0-20 V 0-3 A CV/CC Power Supply — $375.00
HP 6255A Dual 0-40 V 0-1.5 A CV/CC Power Supply — $375.00
KEPCO MPS-620M Triple Output Supply, dual 0-20V 1A tracking & 0-6V 5A — $200.00
TEK PS5010 Programmable Triple Power Supply, TM5000 series — $450.00
TEK PS503A Dual Power Supply, TM500 series — $200.00

### MISCELLANEOUS

ACME PS2L-500 Programmable Load, 0-75 V / 0-75 A / 500 Watts max. — $350.00
BEHLMAN 25-C-D/OSCD-1 AC Power Source, 250 VA, 0-130 VAC, 45-2000 Hz — $850.00
HP 59501B HPIB Isolated DAC/ Power Supply Programmer — $175.00
HP 6060A 300 Watt Programmable Load, 0-60 A / 3-60 V, HPIB — $950.00
KEPCO BOP 20-20M Bipolar Op Amp/Power Supply, to 20 V 20 A — $675.00
KEPCO BOP 50-2M Bipolar Op Amp/Power Supply, to 50 V 2 A — $400.00
TRANSISTOR DEVICES DAL-50-15-100 Programmable Load, 0-50 V, 0-15 A, 100 Watts max. — $200.00

## TIME & FREQUENCY

### UNIVERSAL COUNTERS

HP 5315A 100 MHz/100 nS Universal Counter — $350.00
HP 5315A-001 100 MHz / 100 nS Universal Counter, TCXO reference — $400.00
HP 5315A-002,003 100 MHz/100 nS Univ. Counter; batt. power & 1 GHz C-ch. — $550.00
HP 5315A-003 100 MHz/100 nS Univ. Counter, 1 GHz C-channel option — $450.00
HP 5316A 100 MHz/100 nS Universal Counter, HPIB — $450.00
HP 5316B 100 MHz/ 100 nS Universal Counter, HPIB — $550.00
HP 5335A-10,30,40 200 MHz/2 nS Universal Counter, OCXO ref., 1.3 GHz C-ch — $950.00
HP 5370B 100 MHz/ 20 pS Universal Counter, 11 digits — $1,200.00
PHILIPS PM6672/411 120 MHz/100 nS Universal Counter, C-channel 70-1000 MHz — $375.00
TEK DC5004 Programmable 100 MHz/100nS Counter/Timer, TM5000 series — $200.00
TEK DC5009 Programmable 135 MHz Univ. Counter/Timer, TM5000 series — $350.00
TEK DC503A 125 MHz/100 nS Universal Counter, TM500 series — $275.00
TEK DC509 135 MHz/ 10 nS Universal Counter, TM500 series — $275.00

### FREQUENCY COUNTERS

FLUKE 7220A-010,131,351 1.3 GHz Counter; battery power, OCXO, and res. mult. — $500.00
HP 5342A 18 GHz Frequency Counter — $900.00
HP 5343A-001 26.5 GHz Frequency Counter, OCXO reference — $3,000.00
HP 5343A-001,011 26.5 GHz Frequency Counter, OCXO reference, HPIB — $3,500.00
HP 5345A/5355A/5356B 26.5 GHz CW/Pulse Frequency Counter — $3,500.00
HP 5364A Microwave Mixer / Detector, for modulation domain an. — $2,000.00
HP 5386A-004 3 GHz Frequency Counter, HPIB; OCXO reference option — $1,000.00
HP 105B Quartz Oscillator, 0.1/ 1.0/ 5.0 MHz, battery power — $1,100.00
HP 5087A-opt.032 Distribution Amplifier, 12 outputs at 5 MHz — $1,750.00

## AUDIO & BASEBAND

### SPECTRUM ANALYSIS

HP 3586C Selective Level Meter, 50 Hz-32.5 MHz, 50 & 75 ohms — $1,200.00

### DISTORTION ANALYZERS

HP 8903A Audio Analyzer, 20 Hz-100 kHz — $1,200.00

### RMS VOLTMETERS

FLUKE 8922A True RMS Voltmeter, 180 uV-700 V, 2 Hz-11 MHz — $450.00

### OSCILLATORS

HP 3336C-004,005 21 MHz Synthesizer/ att. Level Gen., OCXO & hi accuracy att. — $1,400.00
TEK SG502 Sine/Square Osc., 5 Hz-500 kHz, 70 dB step atten.,TM500 — $200.00

### MISCELLANEOUS

HP 3575A Phase-Gain Meter, 1 Hz-13 MHz, single display — $600.00
HP 3575A-001 Phase-Gain Meter, 1 Hz-13 MHz, dual display — $850.00
HP 461A Amplifier, 20 dB or 40 dB gain, 1 kHz-150 MHz — $125.00
HP 467A Power Amplifier, X1/X2/X5/X10, DC-1 MHz, 10 W output — $375.00
KROHN-HITE 3103 High/Low Pass Filter, 10 Hz-3 MHz, 24 dB/octave — $350.00
KROHN-HITE 3200 High Pass / Low Pass Filter, 20 Hz-2 MHz, 24 dB/octave — $275.00
KROHN-HITE 3202 Dual HP/LP/BP/BR Filter, 20 Hz-2 MHz, 24 dB/octave — $450.00
KROHN-HITE 3342R Dual HP/LP Filter, 0.001 Hz-99.9 kHz, 48 dB/octave — $900.00
ROCKLAND 852 Dual Highpass/ Lowpass Filter, 0.1 Hz-111 kHz — $650.00
WAVETEK 716 Brickwall Filter — $1,500.00

## RF & MICROWAVE

### SPECTRUM ANALYZERS

HP 11517A/18A/19A/20A Mixer Set, 12.4-40.0 GHz, for HP 8555A/8569A — $500.00
HP 11970A WR28 Harmonic Mixer, 26.5-40 GHz — $1,100.00
HP 11970K WR42 Harmonic Mixer, 18.0-26.5 GHz — $1,100.00
HP 11970Q WR22 Harmonic Mixer, 33-50 GHz — $1,400.00
HP 11971A WR28 Harmonic Mixer, for HP 8569B — $800.00
HP 11971K WR42 Harmonic Mixer, for HP 8569B — $800.00
HP 70620B Preamplifier, 1.0-26.5 GHz, for 70000 series — $3,900.00
HP 8559A/853A-001 Spectrum An., 0.01-21 GHz, 1 kHz res.,w/rackmount frame — $3,500.00
HP 85640A Tracking Generator, 300 kHz-2.9 GHz, for HP 8560 series — $5,000.00




Write in 96 on Reader Service Card.

VISA

# 90 DAY WARRANTY PARTS AND LABOR • 10 DAY INSPECTION

## TEST EQUIPMENT WANTED CALL OR FAX LIST • OPEN ACCOUNTS

MasterCard


HP 8568B Spectrum Analyzer, 100 Hz-1.5 GHz, 10 Hz min. res. ..... $8,500.00
HP 8569B Spectrum Analyzer, 10 MHz-22 GHz, 100 Hz min.res.bw. ..... $5,500.00
TEK 492-opt.02 Spectrum Analyzer, 50 kHz-18 GHz, 1 kHz res. ..... $4,250.00
TEK WM782V WR15 Harmonic Mixer, 50-75 GHz ..... $1,500.00

### NETWORK ANALYZERS

HP 11650A Network Analyzer Accessory Kit, APC7 ..... $600.00
HP 11665B Modulator, 0.15-18 GHz, for HP 8755/6/7 ..... $250.00
HP 85054A Type N Calibration Kit, for HP 8510 series ..... $1,800.00
HP R85026A WR28 Detector, 26.5-40 GHz, for HP 8757 series ..... $1,200.00

### SIGNAL GENERATORS

FLUKE 6060A Synthesized Signal Gen., 0.1-1050 MHz, 10 Hz res., GPIB ..... $1,650.00
FLUKE 6060A/AN Synthesized Signal Generator, 10 kHz-520 MHz, 10 Hz res ..... $950.00
FLUKE 6060B/AK Synthesized Signal Gen., 0.1-1050 MHz, 10 Hz res. ..... $1,900.00
GIGATRONICS 600/6-12 Synthesized Source, 6-12 GHz, 1 kHz res., GPIB ..... $2,500.00
GIGATRONICS 875/50 Levelled Multiplier, x4, 50.0-75.0 GHz output, -3 dBm ..... $2,500.00
GIGATRONICS 900/2-8 Synthesized Signal/Sweep Gen., 2-8 GHz, 1 MHz res.,GPIB ..... $2,500.00
GIGATRONICS GT9000-opt.26A Synthesized Signal Gen., 0.01-20 GHz, 1 kHz res. ..... $6,000.00
HP 11707A Test Plug-in for HP 8660 series ..... $500.00
HP 11720A Pulse Modulator, 2-18 GHz, 80 dB on/off ratio ..... $450.00
HP 3335A-001 Synthesizer/ Level Gen., 200 Hz-81 MHz, -87 to +13 dBm ..... $3,500.00
HP 8656A-001 Signal Generator, 0.1-990 MHz, 100 Hz res., HPIB, OCXO ..... $1,600.00
HP 8657A-002 Signal Generator, 0.1-1040 MHz, 10 Hz res., HPIB ..... $2,750.00
HP 8660C/86602A/86632B Synth. Sig. Gen., 1-1300 MHz, AM / FM ..... $2,500.00
HP 8660C/86603A/86632B Synthesizer, 1-2600 MHz, 1 Hz res., AM / FM ..... $3,250.00
HP 8672A Synthesized Signal Generator, 2-18 GHz, +3 dBm output ..... $4,500.00
HP 8684B Signal Generator, 5.4-12.5 GHz, AM/ WBFM/ Pulse ..... $3,000.00

### SWEEP GENERATORS

HP 8350B/83522A Sweep Oscillator, 10-2400 MHz, +13 dBm levelled ..... $3,900.00
HP 8350B/83540A-002,004 Sweep Oscillator, 2.0-8.4 GHz, 70 dB step attenuator ..... $3,900.00
HP 8350B/83545A-002 Sweep Oscillator, 5.9-12.4 GHz, 70 dB step attenuator ..... $3,900.00
HP 83570A RF Plug-in, 18.0-26.5 GHz, +10 dBm levelled ..... $6,000.00
HP 83592B RF Plug-in, 10 MHz-20 GHz, +13 dBm levelled ..... $8,000.00
HP 8601A Generator/Sweeper, 0.1-110 MHz, +20 dBm levelled ..... $400.00
HP 8620C Sweep Oscillator Frame ..... $550.00
HP 86222A RF Plug-in, 10-2400 MHz, +13 dBm levelled ..... $1,000.00
HP 86222B RF Plug-in, 10-2400 MHz, +13 dBm lvld., crystal markers ..... $1,200.00
HP 86222B-002 RF Plug-in, 10-2400 MHz, +13 dBm lvld., 70 dB step att. ..... $1,350.00
HP 86222B-E69/8620C Sweep Oscillator, 0.01-2 GHz & 2-4 GHz, +10 dBm, w/frame ..... $1,500.00
HP 86230B RF Plug-in, 1.8-4.2 GHz, +10 dBm unlevelled ..... $375.00
HP 86241A-001 RF Plug-in, 3.2-6.5 GHz, +8 dBm levelled ..... $300.00
HP 86260A-H04 RF Plug-in, 10.0-15.0 GHz, +10 dBm unlevelled ..... $500.00
HP 86290C RF Plug-in, 2.0-18.6 GHz, +13 dBm levelled output ..... $1,850.00
WAVETEK 962 Sweep Generator, 1.0-4.0 GHz, markers, +12 dBm unlvld. ..... $950.00

### POWER METERS

BOONTON 42B/41-4E Analog Power Meter, with 1 MHz-18 GHz sensor ..... $450.00
HP 432A/478A Power Meter, -30 to +10 dBm, 10 MHz-10 GHz ..... $300.00
HP 435B/8481A Power Meter, -30 to +20 dBm, 10 MHz-18 GHz ..... $900.00
HP 435B/8482B Power Meter, 0 to +43 dBm, 100 kHz-4.2 GHz ..... $1,500.00
HP 435B/8482H Power Meter, -10 to +34 dBm, 100 kHz-4.2 GHz ..... $900.00
HP 436A-022/8481A Power Meter, -30 to +20 dBm, 10 MHz-18 GHz, HPIB ..... $1,200.00
HP 436A-022/8484A Power Meter, -70 to -20 dBm, 10 MHz-18 GHz, HPIB ..... $1,200.00
HP 437B/8481D Power Meter, -70 to -20 dBm, 10 MHz-18 GHz, HPIB ..... $2,200.00
HP Q8486A Power Sensor, 33.0-50.0 GHz, WR22, for 435/6/7/8 ..... $1,200.00
HP R8486A WR28 Power Sensor, 26.5-40 GHz, for HP 435/6/7/8 ..... $1,500.00

### RF MILLIVOLTMETERS

BOONTON 92C RF Millivoltmeter, 3 mV-3 V f.s., 10 kHz-1.2 GHz ..... $500.00
RACAL-DANA 9303 RF Millivoltmeter, 10 kHz-2 GHz, -70 to +20 dBm ..... $750.00

### AMPLIFIERS, MISCELLANEOUS

AMPLIFIER RESEARCH 4W1000 Amplifier, 40 dB gain, 4 Watts, 1-1000 MHz ..... $950.00
HP 11729B-003 Carrier Noise Test Set, 5 MHz-3.2 GHz ..... $2,250.00
HP 415E SWR Meter ..... $200.00
HP 8406A Comb Generator, 1/ 10/ 100 MHz increments, to 5 GHz ..... $500.00
HP 8447A Amplifier, 20 dB, 0.1-400 MHz, 5 dB NF, +6 dBm output ..... $375.00
HP 8447E Amplifier, 22 dB, 0.1-1300 MHz, +13 dBm output ..... $750.00
HP 8901A Modulation Analyzer, 150 kHz-1300 MHz ..... $1,500.00
HP 8901B-1,2,3 Modulation An., 0.15-1300 MHz, rear input, OCXO, ext.LO ..... $2,000.00
HUGHES 1177H01F000 TWT Amplifier, >30 dB gain, 2-4 GHz, 10 Watts output ..... $1,750.00
HUGHES 1177H10F000 TWT Amplifier, >30 dB gain, 1.4-2.4 GHz, 20 Watts ..... $2,500.00
HUGHES 8010H13F000 TWT Amplifier, >30 dB gain, 3-8 GHz, 10 Watts ..... $2,500.00
RF POWER LABS ML50 Amplifier, 2-30 MHz, 47 dB gain, 50 Watts, metered, 28V ..... $275.00
ROHDE & SCHWARTZ ESH2 Test Receiver, 9 kHz-30 MHz ..... $3,750.00

## COAXIAL & WAVEGUIDE

AEROWAVE 28-3000/10 WR28 Directional Coupler, 10 dB, 26.5-40 GHz ..... $300.00
AMERICAN NUCLEONICS AM-432 Cavity Backed Spiral Antenna,LHC, 2-18 GHz,TNC(f) *NEW* ..... $95.00
AVANTEK AMT-400X2 WR28 Active Doubler, +10 dBm in/ +10 dBm out 26-40 GHz ..... $450.00
BIRD 6735-300 1 kW Load, 25-1000 MHz, LC(f), with wattmeter ..... $650.00
BIRD 8201 500 Watt Oil Dielectric Load, DC-2.5 GHz, N(f) ..... $350.00
FXR/MICROLAB S3-02N Triple Stub Tuner, 200-1000 MHz, 100 Watts max., N(m/f) ..... $125.00
FXR/MICROLAB SL-03N Stub Stretcher, 0.3-6.0 GHz, 100 Watts max., N(m/f) ..... $75.00
GR 874-LTL Constant Impedance Trombone Line, 0-44 cm, DC-2 GHz ..... $400.00
HP 11590A-001 Bias Network, 1.0-18.0 GHz, APC7 ..... $450.00
HP 11636A 2-Way Power Divider, DC-18 GHz, N(m/f/f) ..... $300.00
HP 11691D-001 Directional Coupler, 22 dB, 2-18 GHz, N(f)-all ports ..... $450.00
HP 11692D Dual Directional Coupler, 22 dB, 2-18 GHz ..... $800.00
HP 33321K Programmable Step Atten., 0-70 dB, DC-26.5 GHz, 3.5mm ..... $475.00
HP 33327L-006 Programmable Step Attenuator, 0-70 dB, DC-40 GHz, 2.9mm ..... $1,000.00
HP 774D Dual Directional Coupler, 20 dB, 215-450 MHz ..... $275.00
HP 776D Dual Directional Coupler, 20 dB, 940-1900 MHz ..... $275.00
HP 777D Dual Directional Coupler, 20 dB, 1.9-4.1 GHz ..... $275.00
HP 778D-011 Dual Dir. Coupler, 20 dB, 100-2000 MHz, APC7 test port ..... $450.00
HP 8431A 2-4 GHz Band Pass Filter, N(m/f) ..... $150.00
HP 8494G-002 Programmable Step Attenuator, 0-11 dB, DC-4 GHz, SMA ..... $350.00
HP 8496A-002 Step Attenuator, 0-110 dB, DC-4 GHz, SMA ..... $375.00
HP 8497K-004 Programmable Step Attenuator, 0-90 dB, DC-26.5 GHz ..... $750.00
HP K422A WR42 Flat Broadband Detector, 18.0-26.5 GHz ..... $350.00
HP K532A WR42 Frequency Meter, 18.0-26.5 GHz ..... $450.00
HP K752D WR42 Directional Coupler, 20 dB, 18.0-26.5 GHz ..... $450.00
HP K870A WR42 Slide Screw Tuner, 18.0-26.5 GHz ..... $275.00
HP K914B WR42 Moving Load, 18.0-26.5 GHz ..... $300.00
HP Q752D WR22 Directional Coupler, 20 dB, 33-50 GHz ..... $650.00
HP R382A WR28 Direct Reading Attenuator, 0-50 dB, 26.5-40 GHz ..... $2,250.00
HP R422A WR28 Crystal Detector, 26.5-40 GHz ..... $400.00
HP R752D WR28 Directional Coupler, 20 dB, 26.5-40 GHz ..... $450.00
HP R914B WR28 Moving Load, 26.5-40 GHz ..... $250.00
HP V365A WR15 Isolator, 25 dB, 50-75 GHz ..... $750.00
HP V752D WR15 Directional Coupler, 20 dB, 50-75 GHz ..... $650.00
HP X870A WR90 Slide Screw Tuner ..... $150.00
HUGHES 45322H-1110/1120 WR22 Directional Couplers, 10 or 20 dB, 33-50 GHz ..... $350.00
HUGHES 45712H-1000 WR22 Frequency Meter, 33-50 GHz ..... $750.00
HUGHES 45714H-1000 WR15 Frequency Meter, 50-75 GHz ..... $900.00
HUGHES 45721H-2000 WR28 Direct Reading Attenuator, 0-50 dB, 26.5-40 GHz ..... $1,000.00
HUGHES 45722H-1000 WR22 Direct Reading Attenuator, 0-50 dB, 33-50 GHz ..... $1,000.00
HUGHES 45724H-1000 WR15 Direct Reading Attenuator, 0-50 dB, 50-75 GHz ..... $1,000.00
HUGHES 45732H-1200 WR22 Level Set Attenuator, 0-25 dB, 33-50 GHz ..... $250.00
HUGHES 45752H-1000 WR22 Direct Reading Phase Shifter, 0-360 deg.,33-50 GHz ..... $1,400.00
HUGHES 45772H-1100 WR22 Thermistor Mount, -20 to +10 dBm, 33-50 GHz ..... $400.00
HUGHES 45773H-1100 WR19 Thermistor Mount, -20 to +10 dBm, 40-60 GHz ..... $650.00
HUGHES 45774H-1100 WR15 Thermistor Mount, -20 to +10 dBm, 50-75 GHz ..... $750.00
HUGHES 47316H-1111 WR10 Tuneable Detector, 75-110 GHz, positive polarity ..... $600.00
HUGHES 47741H-2310 WR28 Phase Locked Gunn Osc., 32.000 GHz, +18 dBm ..... $2,000.00
HUGHES 47742H-1210 WR22 Phase Locked Gunn Osc., 42.000 GHz, +18 dBm ..... $2,750.00
KRYTAR 201020010 Directional Detector, 1-20 GHz, SMA(f/f)/SMC ..... $200.00
KRYTAR 2616S Directional Detector, 1.7-26.5 GHz, K(f/m)/SMC ..... $200.00
M/A-COM 3-19-300/10 WR19 Directional Coupler, 10 dB, 40-60 GHz ..... $450.00
MICA C-121S06 Circulator, 17.5-24.5 GHz, SMA(f/m/m) ..... $75.00
MINI-CIRCUITS ZFDC-20-4 Directional Coupler, 19.5 dB, 1-1000 MHz, SMA(f) ..... $25.00
NARDA 3000-SERIES Directional Couplers ..... $150.00
NARDA 3020A Bi-Directional Coupler, 50-1000 MHz, N ..... $475.00
NARDA 3024 Bi-Directional Coupler, 20 dB, 4-8 GHz ..... $375.00
NARDA 3090-SERIES Precision High Directivity Couplers ..... $225.00
NARDA 368BNM Coaxial High Power Load, 500 Watts, 2.0-18 GHz, N(m) ..... $500.00
NARDA 3752 Coaxial Phase Shifter, 0-180 deg./GHz, 1-5 GHz ..... $1,000.00
NARDA 3753B Coaxial Phase Shifter, 0-55 deg./GHz, 3.5-12.4 GHz ..... $1,000.00
NARDA 4000-SERIES SMA Miniature Directional Couplers ..... $75.00
NARDA 4226-10 Directional Coupler, 10 dB, 0.5-18.0 GHz, SMA(f) ..... $275.00
NARDA 4227-16 Directional Coupler, 16 dB, 1.7-26.5 GHz, 3.5mm(f) ..... $325.00
NARDA 4242-20 Directional Coupler, 20 dB, 0.5-2.0 GHz, SMA(f) ..... $100.00
NARDA 4247-20 Directional Coupler, 20 dB, 6.0-26.5 GHz, 3.5mm(f) ..... $200.00
NARDA 4247B-10 Directional Coupler, 10 dB, 6.0-26.5 GHz, 3.5mm(f) ..... $200.00
NARDA 5070-SERIES Precision Reflectometer Couplers ..... $300.00
NARDA 562 DC Block, 10 MHz-12.4 GHz, 100 V max., N(m/f) ..... $65.00
NARDA 765-10 10 dB Attenuator, 50 Watts, DC-5 GHz, N(m/f) ..... $165.00
NARDA 791FM Variable Attenuator, 0-37 dB, 2.0-12.4 GHz ..... $600.00
NARDA 792FF Variable Attenuator, 0-20 dB, 2.0-12.4 GHz ..... $375.00
NARDA 794FM Direct Reading Variable Attenuator, 0-40 dB, 4-8 GHz ..... $375.00
OMNI-SPECTRA 2085-6010-00 Crystal Detector, 1-18 GHz, negative polarity, SMA(m/f) ..... $50.00
PAMTECH KYG1014 WR42 Junction Circulator, 18.0-26.5 GHz ..... $250.00
SONOMA SCIENTIFIC 21A3 WR42 Circulator, 20 dB, 20.6-24.8 GHz ..... $75.00
TEKTRONIX 2701 Step Attenuator, 0-79 dB, DC-1 GHz, AC or DC coupled ..... $175.00
TRG B510 WR22 Direct Reading Attenuator, 0-50 dB, 33-50 GHz ..... $900.00
TRG V510 WR15 Direct Reading Attenuator, 0-50 dB, 50-75 GHz ..... $900.00
TRG V551 WR15 Frequency Meter, 50-75 GHz ..... $600.00
TRG W510 WR10 Direct Reading Attenuator, 0-50 dB, 75-110 GHz ..... $1,000.00
TRG W551 WR10 Frequency Meter, 75-110 GHz ..... $750.00
WAVELINE 100080 WR28 Terminated Crossguide Coupler, 30 dB ..... $200.00
WEINSCHEL 150-110 Programmable Step Attenuator, 0-110 dB, DC-18 GHz, SMA ..... $450.00
WEINSCHEL DS109 Double Stub Tuner, 1-13 GHz, N(m/f) ..... $150.00
WEINSCHEL DS109LL Double Stub Tuner, 0.2-2.0 GHz, N(m/f) ..... $150.00
HP 3780A Pattern Generator / Error Detector, 1 kb/s - 50 Mb/s ..... $850.00

## COMMUNICATIONS

HP 4935A Transmission Impairment Measuring Set ..... $600.00
HP 59401A HPIB Bus Analyzer ..... $375.00
MICRODYNE 1200MR 215-320 MHz Telemetry Receiver, PSK demodulation ..... $450.00
TEK 1410R NTSC Gen., w/SPG2 sync. generator, TSG7 color bars ..... $800.00
TEK 1411R PAL Gen.,w/SPG12 sync; TSG11 color bars;TSG13 linearity ..... $750.00
TEK 1411R PAL Test Gen., w/SPG12,TSG11,TSG13,TSG15,TSG16 ..... $1,000.00
TEK 1411R PAL Test Gen., w/SPG12,TSG11,TSG12,TSG13,TSG15,TSG16 ..... $1,100.00
TEK 1411R-opt.04 PAL Test Gen.,w/ SPG12,TSG11,TSP11,TSG13,TSG15,TSG16 ..... $1,400.00
TEK 147A NTSC Test Signal Generator, with noise test signal ..... $800.00
TEK 148 PAL Insertion Test Signal Generator ..... $700.00
TEK 520A NTSC Vectorscope ..... $750.00
TEK 521A PAL Vectorscope ..... $750.00

## MISCELLANEOUS

EG&G / P.A.R. 5302 / 5316 Lock-in Amplifier, 100 mHz-1 MHz, GPIB / RS232C ..... $2,250.00
FLUKE 2180A RTD Digital Thermometer ..... $500.00
P.A.R. 5206-95,98 Two-Phase Lock-in Amp., 2 Hz-100 kHz, GPIB ..... $1,500.00
TEK TM5006 5000-series 6-slot Programmable Power Module ..... $500.00
TEK TM504 500-series 4-slot Power Module ..... $175.00
TEK TM506 500-series 6-slot Power Module ..... $250.00
TEK TM515 500-series 5-slot Traveller Power Module ..... $250.00

# Events

# CALENDAR

The Events Calendar is a free service for publicizing electronic events such as amateur radio hamfests, flea markets, etc. If your organization is sponsoring an event and would like a free listing, contact us at least 60 days in advance. Include your flyer, estimated attendance, name of the person to contact, and phone number.

Complimentary issues are available upon request for distribution to your attendees. A street address for UPS is required.

While we strive for accuracy in our calendar, we can not be responsible for errors or cancellations. The information contained in this column is for the use of the readers of *Nuts & Volts* and may not be republished in any form without the written permission of T & L Publications, Inc.

All listing information should be sent to:
**Nuts & Volts Magazine**
**Events Calendar**
430 Princeland Court
Corona, CA 92879
**Phone** 909-371-8497
**Fax** 909-371-3052
**E-mail** events@nutsvolts.com

## OCTOBER 2000

### October 1

**IA - WEST LIBERTY** - Hamfest. Muscatine County Fairgrounds. VE Exams. Talk-in: 146.31/91, 146.25/85, 146.52 local. Muscatine ARC & IA City ARC, Steve Fowler KA9AQR, 309-537-3678. Email: sfowler@winco.net Web: http://www.qsl.net/kc0aqs/hamfest.html
**IL - DECATUR** - Hamfest. Cenois ARC, Spencer Carter N9LVW, 217-692-2460. Email: n9lvw@msn.com Web: http://members.tripod.com/btdad/hamfest_y2k.html
**IN - BEDFORD** - Hamfest. Lawrence County 4-H Fairgrounds. Hoosier Hills Ham Club, John Scheiwe KB9LTI, 812-279-0050. Email: chairman@hoosierhillshamfest.org Web: http://www.hoosierhillshamfest.org
**PA - WRIGHTSTOWN** - Hamfest. Middletown Grange Fairgrounds, Penns Park Rd. Pack Rats, Joe Keer KU3T, Email: ku3t@amsat.org Web: http://www.ij.net/packrats
**WA - CHEHALIS** - Hamfest. The Southwest Washington Fairgrounds. Talk-in: 147.06+ PL 110.9, 146.46 simplex. Chehalis Valley ARS, James Kruger KK7AB, 360-748-1930. Email: teaser@localaccess.com Web: http://www2.localaccess.com/teaser/cvars/

### October 6-7

**NH - ROCHESTER** - Hamfest. Fairgrounds. Hoss Traders, Joe Demaso K1RQG, 207-469-3492. Email: k1rqg@aol.com Web: http://www.qsl.net/k1rqg

### October 6-7-8

**AZ - SCOTTSDALE** - Southwestern Div. Convention. Ramada Inn Valley Ho, 6850 Main St. Scottsdale ARC, Walt Schuknecht N7IZM, 480-947-0338. Email: n7izm@arrl.net Web: http://www.w7asc.org/swdc2000
**OK - BROKEN ARROW** - Hamfest. Broken Arrow ARC, Joe Horn KC5VPO, 918-451-0028. Web: http://www.qsl.net/w5bbs/hamfest

### October 7

**FL - ORLANDO** - Hamfest. Bahia Temple, 2300 Prembrook Dr. Talk-in: 147.390. Ed KY4E, 407-660-0936. Email: y4e@excite.com
**MO - WARRENSBURG** - Hamfest. Warrensburg Area ARC, Denise Haye N0PVS, 816-697-3426. Email: we0g@microlink.net Web: http://www.call.to/waarci
**NJ - TEANECK** - Hamfest. Fairleigh Dickinson University. 8am-2pm. FCC Exams. Talk-in: 146.19/79 and 146.52 simplex. Bergen ARA, Jim Joyce K2ZO, 201-664-6725. Email: jjjoyce@cybernex.net Web: http://www.bara.org
**PA - LANCASTER COUNTY** - Hamfest. West Earl Community Park, Rt. 772. 8am-2pm. Talk-in: 147.015 PL 118.8. Red Rose Repeater Assn., Pat Bouder KA3FGH, 717-626-7539. Email: rbouder-pat@redrose.net
**SC - ROCK HILL** - Hamfest. York County ARS, Bob Good K4BG, 803-327-9855. Email: k4bg@cetlink.net
**TN - SEVIERVILLE** - Hamfest. Ten-Tec, Inc., Scott Robbins W4PA, 865-453-7172. Email: sales@tentec.com
**TX - BELTON** - Hamfest. Bell County Expo Center. Talk-in: 146.820-, PL 123.0. Temple ARC, Mike LeFan WA5EQQ, 254-773-3590. Email: hamexpo@tarc.org Web: http://www.tarc.org

### October 8

**CT - WALLINGFORD** - State Convention. Mountainside Special Event Facility. 9am-3pm. Talk-in: 147.36/96. Nutmeg Hamfest Alliance, Gordon Barker K1BIY, 860-342-3258. Email: k1biy@juno.com Web: http://www.qsl.net/nutmeghamfest
**IL - OAKBROOK TERRACE**- Hamfest. Entrance at Park View Dr. 8am-1pm. Chicago ARC, George 773-545-3622. Dean 708-331-7764
**MD - WEST FRIENDSHIP** - Hamfest. Howard County Fairgrounds, Rt. 144. 8am-3:30pm. Talk-in: 147.135/R+. Columbia ARA, Randy Krenz N3HFK, 410-796-2587. Email: n3hfk@arrl.net Web: http://www.qsl.net/cara
**MI - DIMONDALE** - Hamfest. The Summit, 9410 Davis Hwy. 8am-2pm. VE testing. Talk-in: 145.390 (-600) and 146.520. Central MI ARC & Lansing Civil Defense Repeater Assn., J. Ervin Bates W8ERV, 517-676-2710. Email: w8erv@arrl.net Web: http://www.qsl.net/CMARC/hamfair.html
**OH - MEDINA** - Hamfest. National Guard Armory, 920 Lafayette Rd. 8am-2pm. Medina Two Meter Group, Michael Rubaszewski N8TZY, 330-273-1519. Email: n8tzy@webcombo.net Web: http://www.qsl.net/m2m

### October 13-14

**AR - SPRINGDALE** - Hamfest. Northwest AR ARC, Richard Naylor K5LRS, 501-442-8932. Email: k5lrs@aol.com
**FL - WALDO** - Hamfest. Dixieland Music Park. Talk-in: 145.150-. Bradford Area ARC, John Bradley KU4AY, 904-782-1185. Email: jbradley@techcomm.net Web: http://www.angelfire.com/fl/arcba/index.html

### October 14

**CA - FONTANA** - Inland Empire ARC Amateur Radio & Electronics Swapmeet. A B Miller High School. Bill 909-822-4138 eves
**FL - TAMPA** - Hamfest. Egypt Temple Complex, 4050 Dana Shores Dr. 8am-5pm. Talk-in: 146.940. Egypt Shrine Temple AR, Jay Strom K9BSL, 727-822-9107. Email: k9bsl@juno.com
**GA - AUGUSTA** - Hamfest. Westside High School. 9am-3pm. Talk-in: 145.490. ARC of Augusta, Henry KN4AV, 706-793-1625. Email: kn4av@bellsouth.net or w4dv@arrl.net
**ME - ELLSWORTH** - Symposium. Phil Duggan N1EP, 207-546-7028. Email: n1ep@yahoo.com
**MT - BOZEMAN** - Hamfest. Gallatin Ham RC, Don Wilson KC7EWZ, 406-586-6659. Email: nandon@mcn.net
**ND - GRAND FORKS** - Hamfest. Forks ARC, Steve DuFault KB0QQE, 218-281-7875. Email: kb0qqe@rrv.net
**NJ - LEONARDO** - Hamfest. Croydon Hall. VE testing. Talk-in: 145.485 -6, 151.4. Garden State ARA, Mario Sellitti N2PVP, 732-787-7184. Email: gsara@arrl.net Web: http://www.monmouth.com/~gsara
**TX - DENTON** - North Texas Section Convention. Denton Civic Center, 321 E. McKinney St. 7am-3pm. Talk-in: 146.92 (PL 110.9). Denton County ARA, William Spradling WA5I, 817-441-1170. Email: wa5i@aol.com Web: http://www.dmathis@lsic.net
**VA - STAFFORD** - Hamfest. Mt. Ararat Baptist Church parking lot. 8am-3pm. Talk-in: 145.27. Stafford ARA, Richard Diddams KF6UTH, 540-657-8322. Email: rldiddams@earthlink.net Web: http://www.n4nw.org
**WA - BREMERTON** - Hamfest. County Fairgrounds, President's Hall, NW corner of Fairgrounds Rd. at Nels Nelson Rd. 9am-2pm. Talk-in: 146.620- 103.5, 146.520 simplex. North Kitsap ARC, Susan Johnson AB7MD, 360-697-9379. Email: nkarc@yahoo.com Web: http://www.silverlink.net/nkarc

### October 15

**MA - CAMBRIDGE** - Flea at MIT. Albany and Main Sts. 9am-2pm. Talk-in: 146.52 & 449.725/444.725 W1XM/R PL 114.8 (2A). Nick Altenbernd KA1MQX, 617-253-3776 (9-5). Web: http://web.mit.edu/w1mx/www/swapfest.html
**MI - KALAMAZOO** - Hamfest. Kalamazoo County Fairgrounds. VE Testing. Talk-in: 147.040. Kalamazoo ARC & Southwest Michigan AR Team, Charlie Burgstahler K8BLO. Email: charlieb@net-link.net Web: http://www.qsl.net/k8blo/hamfest.htm
**NY - QUEENS** - Hamfest. NY Hall of Science parking lot, Flushing Meadow Corona Park, 47-01 111th St. VE exams. Talk-in: 444.200 repeat, PL 136.5, 146.52 simplex. The Hall of Science ARC, Stephen Greenbaum WB2KDG, 718-898-5599, eves only. Email: WB2KDG@Bigfoot.com or Andy Borrok N2TZX, 718-291-2561. Email: N2TZX@webspan.net
**OH - ASHLAND** - Hamfest. Ashland Area ARC, David Fike N8UCA, 419-289-1082. Email: aaarc@neo.rr.com
**OH - LIMA** - Hamfest. Northwest Ohio ARC, Greg Schwark N8WBD, 419-647-6321 or 419-647-5127. Email: gas1950@aol.com

### October 19

**NC - BURLINGTON** - Swapmeet. 2058 Carolina Mill Rd. 9am-4pm. Email: info@gosam.com Web: www.gosam.com

### October 20-21-22

**CA - CONCORD** - Pacific Division Convention. Sheraton Concord (Airport) Hotel. Mt. Diablo ARC, Terry Matzkin KE6WRE, 925-820-5848. Web: http://www.pacificon.org

### October 21

**CT - WATERFORD** - Auction. Senior Citizens Center, Waterford Municipal Complex, Rt. 85. Talk-in: 146.97. Tri-City ARC, Austin J. Wolfe AA1SV, 860-443-2459. Email: aa1sv@downcity.net
**FL - PALM BEACH GARDENS** - Hamfest. Palm Beach Repeater Assn., Ken Summerell KD4CTG, 561-640-9447. Email: kd4ctg@freewwweb.com
**IL - GODFREY** - Hamfest. Lewis & Clark RC, Larry Roberts W9MXC, 314-233-3499. Email: lhrob@home.com
**LA - LAKE CHARLES** - Hamfest. Lake Charles SW LA ARC, Joe Czejkowski WE5V, 337-855-9202. Email: joeczejk@juno.com
**MO - GRANDVIEW** - Hamfest. South Side ARC, Donna Quick KB0YJN, 816-537-7464. Email: kb0yjn@juno.com Web: http://www.qsl.net/southsidearc/
**NH - NASHUA** - Hamfest. Res Ctr Church. NE Antique RC 617-923-2665
**OR - RICKREALL** - Convention. Polk County Fairgrounds. 9am-3:30pm. Talk-in: 146.86. Mid-Valley ARES, Bud Smith WA7FJF 503-838-0266. Email: wa7fjf@arrl.net Web: http://www.teleport.com/~n7ifj/swaptobe.htm
**PA - SUNBURY** - Hamfest. Sunbury

## COMPUTER SHOWS

**AGI Shows**, 317-299-8827.
E-Mail: info@agishows.com
http://www.agishows.com

**Blue Star Productions**
612-788-1901.
http://www.supercomputersale.com

**Computers And You**, 734-283-1754.
www.a1-supercomputersales.com

**Computer Central Shows**
847-412-1900 & 1-888-296-6066.
E-Mail: compcent@megsinet.net
www.computercentralshows.com

**Computer Country Expo**
847-662-0811 Web: www.ccxpo.com

**Five Star Productions**
810-379-3333. E-Mail: jeff@fivestar
www.fivestarshows.com

**Georgia Mountain Productions**
706-838-4827.
E-Mail: gamtnpro@blrg.tds.net
georgiamountain.com

**Gibraltar Trade Center, Inc.**
734-287-2000. Taylor, MI.
E-Mail: taylor@gibraltartrade.com
www.gibraltartrade.com

**Gibraltar Trade Center, Inc.**
810-465-6440. Mt. Clemens, MI.
E-Mail: mtclemens@gibraltartrade.com
www.gibraltartrade.com

**KGP Productions**
1-800-631-0062, 732-297-2526.
E-Mail: kgp@mail.com

**MarketPro, Inc.**, 201-825-2229.
http://www.marketpro.com

**MarketPro, Inc.**, 301-984-0880.
E-Mail: md@marketpro.com
http://marketpro.com

**Narisaam Computer Show**
770-663-0983.
E-Mail: narisaam@aol.com
Web: http://www.shownsale.com

**Northern Computer Shows**
978-744-8440.
E-Mail: inquiries@ncshows.com
Web: ncshows.com

**Peter Trapp Computer Shows**
603-272-5008.
Web: www.petertrapp.com

# Events CALENDAR

Armory, Catawissa Ave. 8am-3pm. Talk-in: 147.270 and 146.250 simplex. Susquehanna Valley ARC, David Welker K3SI, 570-286-0787. Email: k3si@hotmail.com Web: http://avs.epix.net/svarc/
**TN - GRAY** - Hamfest. Appalachian Fairgrounds, off I-181. Kingsport, Bristol, and Johnson City Radio Clubs, Wendell Messimer K4ZHK, POB 3682 CRS, Johnson City, TN 37602

### October 22

**MD - WESTMINSTER** - Hamfest. Carroll County Agricultural Center. Talk-in: 145.410(-). The Carroll County ARC, Inc., Email: w3jjh@arrl.net
Web: http://www.qis.net/~k3pzn
**MI - WARREN** - Hamfest. Italian American Cultural Center, 28111 Imperial Dr. 8am-1pm. VE Testing. Talk-in: 147.180+/ PL 100 Hz. Utica Shelby Emergency Communications Assn., Dave Cunningham KC8IAQ, 810-263-0227.
Email: kc8iaq@att.net Web: http://members.home.net/dougk/useca.htm
**NY - FARMINGDALE** - Hamfest. Radio Central ARC, Neil Heft KC2KY, 631-737-0019. Email: nheft@attglobal.net
Web: http://www.rcarc.org/expo.htm
**PA - SELLERSVILLE** - Hamfest. Sellersville Fire House, Rt. 152. VE Session. Talk-in: 145.31. RF Hill ARC, Linda Erdman KA3TJZ, 215-679-5764.
Web: http://www.rfhill.ampr.org

### October 27-28

**OK - KINGSTON** - Hamfest. Lake Texoma Lodge, Hwy. 70. Texoma Hamarama Assn., Herb Sleeper WB5PHM, 940-855-5820.
Email: retmarine@cst.net

### October 28

**CANADA - QUEBEC - MONTREAL** - Hamfest. Montreal South ARC, Micheline Simard VE2XW, 450-446-0477.
Email: ve2xw@amsat.org
**FL - JACKSONVILLE** - Hamfest. Morocco Shrine Auditorium, 3800 S. St. Johns Bluff Rd. 9am-9pm. Talk-in: 146.76 and 146.88. Greater Jacksonville Hamfest Assn., Jeff Greer WD4ET, 904-613-7427 or Deborah Lusk KG4ADZ, 904-739-9713.
Web: http://www.se.mediaone.net/~Irich/JAXHAMFEST.html
**MN - ST. PAUL** - Hamfest. RiverCentre. 8am-4pm. VE exams. Twin Cities FM Club, Amanda Roberts KG0AY, 612-535-0637.
Email: kg0ay@pclink.com
Web: http://www.hamfestmn.org
**MO - ST. LOUIS** - Hamfest. Kirkwood Community Center, 111 N. Geyer Rd. 8am-2pm. VE exams. Talk-in: 146.91-. St. Louis ARC & Gateway to Ham RC, Steve Welton WB0IUN, 314-638-4959.
Email: slw@partyline.net
**SC - SUMTER** - Hamfest. Sumter ARA, Thomas D'Anella KC4ZTC, 803-499-4806.
Email: dstoy@sumter.net Web: http://www.geocities.com/capecanaveral/2695/sara.htm
**TN - EAST RIDGE** - Hamfest. Camp Jordan Arena. 8am-4pm. VE exams. Talk-in: 146.79- & 444.1+. Chattanooga ARC, David Hoffman KE4FGW, 423-877-7398. Email: ke4fgw@vol.com Web: http://www.qsl.net/w4am/carc_index.html

### October 28-29

**FL - UMATILLA** - Hamfest. Olde Mill Stream RV Resort, 1000 N. Central Ave. VE Exams. Talk-in: 147.255. Lake ARA, Chuck Crittenden KE4EXM, 352-669-2075.
Email: capias@gate.net
**TX - EL PASO** - Int'l Hamfiesta. Clay Emert K5TRW, 915-859-5502

### October 29

**IA - DES MOINES** - Hamfest. Tikva Tracers ARC & Iowa Assn., of ARCs, Rod Ivers KI0BW, 515-276-0500 or 515-278-9945.
Email: ki0bw@arrl.net
**NY - LINDENHURST** - Hamfest. Knights of Columbus Hall, 400 S. Broadway. 9am-2pm. GSBARC & SCRC, Lenore Dunlop N2KYP, 516-785-0826.
Email: info@gsbarc.org
Web: http://www.gsbarc.org
**OH - CANTON** - Hamfest. Stark County Fairgrounds. Talk-in: 147.18+. The Massillon ARC.
Email: marc.hamclub@juno.com
Web: www.qsl.net/w8np
**OH - MARION** - Hamfest. Marion ARC, Karen Eckard N8KE, 740-499-3565.
Email: meeker@gte.net
**PA - CARLISLE** - Hamfest. Carlisle Fairgrounds. 8am-3pm. Talk-in: 145.430. South Mountain Repeater Assn., Bill Smyser, 717-532-9870.
Email: smraham@aol.com
Web: www.qsl.net/kb3cvo

## NOVEMBER 2000

### November 4

**FL - SORRENTO** - Hamfest. Lake ARA, John Gable W8KCE, 352-394-2723.
Email: w8kce@aol.com
**NH - LONDONDERRY** - Hamfest. Londonderry Lions Club, Mammoth Rd. Talk-in: 146.850. The Interstate Repeater Society ARC, Paul 603-883-3308.
Email: Harold@neainc.com
**NJ - LAWRENCEVILLE** - Hamfest. Lawrence High School, 2525 Princeton Pike. 8am-1pm. VE exams. Talk-in: 146.670, PL 131.8. Delaware Valley RA, 609-882-2240. Email: w2zq@arrl.net Web: www.siac.com/w2zq
**NM - SOCORRO** - Hamfest. Socorro ARA, Tech ARA, & City of Socorro, Al Braun AC5BX, 505-835-3370.
Email: ac5bx@juno.com
Web: http://www.ees.nmt.edu/sara/
**OK - ALTUS** - Hamfest. Altus Area ARA, MK Schenkel W5VXU, 580-846-5578.
Email: w5vxu@juno.com
**OK - ENID** - Hamfest. Garfield County Fairgrounds, Hoover Bldg. 8am-5pm. Talk-in: 147.15+, 444.40+. Enid ARC, Tom Worth N5LWT, 580-233-8473; email: n5lwt@hotmail.com or Fred Selfridge WA5OU, 580-242-3551
**WA - FERNDALE** - Hamfest. Mount Baker


RAMSEY

**Doppler Direction Finder**

Track down jammers and hidden transmitters with ease! This is the famous WA2EBY DF'er featured in April 99 QST. Shows direct bearing to transmitter on compass style LED display, easy to hook up to any FM receiver. The transmitter - the object of your DF'ing - need not be FM, it can be AM, FM or CW. Easily connects to receiver's speaker jack and antenna, unit runs on 12 VDC. We even include 4 handy home-brew "mag mount" antennas and cable for quick set up and operation! Whips can be cut and optimized for any frequency from 130-1000 MHz. Track down that jammer, win that fox hunt, zero in on that downed Cessna - this is an easy to build, reliable kit that compares most favorably to commercial units costing upwards of $1000.00! This is a neat kit!!
DDF-1, Doppler Direction Finder Kit ..... $149.95

**1 GHz RF Signal Generator**

A super price on a full featured RF signal generator! Covers 100 KHz to 999.99999 MHz in 10 Hz steps. Tons of features; calibrated AM and FM modulation, 90 front panel memories, built-in RS-232 interface, +10 to -130 dBm output and more! Fast and easy to use, its big bright vacuum florescent display can be read from anywhere on the bench and the handy 'smart-knob' has great analog feel and is intelligently enabled when entering or changing parameters in any field – a real time saver! All functions can be continuously varied without the need for a shift or second function key. In short, this is the generator you'll want on your bench, you won't find a harder working RF signal generator - and you'll save almost $3,000 over competitive units!
RSG-1000B RF Signal Generator ..... $1995.00

**Wireless RF Data Link Modules**

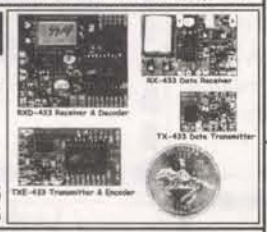


RF link boards are perfect for any wireless control application; alarms, data transmission, electronic monitoring...you name it. Very stable SAW resonator transmitter, crystal controlled receiver - no frequency drift! Range up to 600 feet, license free 433 MHz band. Encoder/decoder units have 12 bit Holtek HT-12 series chips allowing multiple units all individually addressable, see web site for full details. Super small size - that's a quarter in the picture! Run on 3-12 VDC. Fully wired and tested, ready to go and easy to use!
RX-433 Data Receiver..... $16.95 TX-433 Data Transmitter..... $14.95
RXD-433 Receiver/Decoder..... $21.95 TXE-433 Transmitter/Encoder..... $19.95

**Super Pro FM Stereo Transmitter**

Professional synthesized FM Stereo station in easy to use, handsome cabinet. Most radio stations require a whole equipment rack to hold all the features we've packed into the FM-100. Set freq with Up/Down buttons, big LED display. Input low pass filter gives great sound (no more squeals or swishing from cheap CD inputs!) Limiters for max 'punch' in audio - without over mod, LED meters to easily set audio levels, built-in mixer with mike, line level inputs. Churches, drive-ins, schools, colleges find the FM-100 the answer to their transmitting needs, you will too. Great features, great price! Kit includes cabinet, whip antenna, 120 VAC supply. *We also offer a high power export version of the FM-100 fully assembled with one watt of RF power, for miles of program coverage. The export version can only be shipped if accompanied by a signed statement that the unit will be exported.*
FM-100, Pro FM Stereo Transmitter Kit ..... $249.95
FM-100WT, Fully Wired High Power FM-100..... $399.95

**World's Smallest TV Transmitters**

We call them the 'Cubes'.... Perfect video transmission from a transmitter you can hide under a quarter and only as thick as a stack of four pennies - that's a nickel in the picture! Transmits color or B&W with fantastic quality - almost like a direct wired connection to any TV tuned to cable channel 59. Crystal controlled for no frequency drift with performance that equals models that cost hundreds more! Basic 20 mW model transmits up to 300' while the high power 100 mW unit goes up to 1/4 mile. Their very light weight and size make them ideal for balloon and rocket launches, R/C models, robots - you name it! Units run on 9 volts and hook-up to most any CCD camera or standard video source. In fact, all of our cameras have been tested to mate perfectly with our Cubes and work great. Fully assembled - just hook-up power and you're on the air! One customer even put one on his dog!
C-2000, Basic Video Transmitter..... $89.95 C-2001, High Power Video Transmitter... $179.95

**CCD Video Cameras**

Top quality Japanese Class 'A' CCD array, over 440 line line resolution, not the off-spec arrays that are found on many other cameras. Don't be fooled by the cheap CMOS single chip cameras which have 1/2 the resolution, 1/4 the light sensitivity and draw over twice the current! The black & white models are also super IR (Infra-Red) sensitive. Add our invisible to the eye, IR-1 illuminator kit to see in the dark! Color camera has Auto gain, white balance, Back Light Compensation and DSP! Available with Wide-angle (80°) or super slim Pin-hole style lens. Run on 9 VDC, standard 1 volt p-p video. Use our transmitters for wireless transmission to TV set, or add our IB-1 Interface board kit for super easy direct wire hook-up to any Video monitor, VCR or TV with A/V input. Fully assembled, with pre-wired connector.
CCDWA-2, B&W CCD Camera, wide-angle lens ..... $69.95
CCDPH-2, B&W CCD Camera, slim fit pin-hole lens.. $69.95
CCDCC-1, Color CCD Camera, wide-angle lens .... $129.95
IR-1, IR Illuminator Kit for B&W cameras ..... $24.95
IB-1, Interface Board Kit ..... $14.95

**AM Radio Transmitter**

Operates in standard AM broadcast band. Pro version, AM-25, is synthesized for stable, no-drift frequency and is setable for high power output where regulations allow, typical range of 1-2 miles. Entry-level AM-1 is tunable, runs FCC maximum 100 mW, range 1/4 mile. Both accept line-level inputs from tape decks, CD players or mike mixers, run on 12 volts DC. Pro AM-25 includes AC power adapter, matching case and bottom loaded wire antenna. Entry-level AM-1 has an available matching case and knob set that dresses up the unit. Great sound, easy to build - you can be on the air in an evening!
AM-25, Professional AM Transmitter Kit..... $129.95
AM-1, Entry level AM Radio Transmitter Kit... $29.95
CAM, Matching Case Set for AM-1..... $14.95

**FM Stereo Radio Transmitters**

No drift, microprocessor synthesized! Great audio quality, connect to CD player, tape deck or mike mixer and you're on-the-air. Strapable for high or low power! Runs on 12 VDC or 120 VAC. Kit includes snazzy case, whip antenna, 120 VAC power adapter - easy one evening assembly.
FM-25, Synthesized Stereo Transmitter Kit ..... $129.95

Lower cost alternative to our high performance transmitters. Great value, easily tunable, fun to build. Manual goes into great detail about antennas, range and FCC rules. Handy for sending music thru house and yard, ideal for school projects too - you'll be amazed at the exceptional audio quality! Runs on 9V battery or 5 to 15 VDC. Add matching case and whip antenna set for nice 'pro' look.
FM-10A, Tunable FM Stereo Transmitter Kit..... $34.95
CFM, Matching Case and Antenna Set ..... $14.95
FMAC, 12 Volt DC Wall Plug Adapter..... $9.95

**Mini Radio Receivers**

Imagine the fun of tuning into aircraft a hundred miles away, the local police/fire department, ham operators, or how about Radio Moscow or the BBC in London? Now imagine doing this on a little radio you built yourself - in just an evening! These popular little receivers are the nuts for catching all the action on the local ham, aircraft, standard FM broadcast radio, shortwave or WWV National Time Standard radio bands. Pick the receiver of your choice, each easy to build, sensitive receiver has plenty of crystal clear audio to drive any speaker or earphone. Easy one evening assembly, run on 9 volt battery, all have squelch except for shortwave and FM broadcast receiver which has subcarrier output for hook-up to our SCA adapter. The SCA-1 will tune in commercial-free music and other 'hidden' special services when connected to FM receiver. Add our snazzy matching case and knob set for that smart finished look!
AR-1, Airband 108-136 MHz Kit..... $29.95
HFRC-1, WWV 10 MHz (crystal controlled) Kit..... $34.95
FR-1, FM Broadcast Band 88-108 MHz Kit..... $24.95
SR-1, Shortwave 4-11 MHz Band Kit..... $29.95
SCA-1 SCA Subcarrier Adapter kit for FM radio.... $27.95
FR-6, 6 Meter FM Ham Band Kit..... $34.95
FR-10, 10 Meter FM Ham Band Kit..... $34.95
FR-146, 2 Meter FM Ham Band Kit..... $34.95
FR-220, 220 MHz FM Ham Band Kit..... $34.95
Matching Case Set (specify for which kit).... $14.95

**RF Power Booster**

Add muscle to your signal, boost power up to 1 watt over a freq range of 100 KHz to over 1000 MHz! Use as a lab amp for signal generators, plus many foreign users employ the LPA-1 to boost the power of their FM transmitters, providing radio service through an entire town. Runs on 12 VDC. For a neat finished look, add the nice matching case set. Outdoor unit attaches right at the antenna for best signal - receiving or transmitting, weatherproof, too!
LPA-1, Power Booster Amplifier Kit..... $39.95
CLPA, Matching Case Set for LPA-1 Kit..... $14.95
LPA-1WT, Fully Wired LPA-1 with Case..... $99.95
FMBA-1, Outdoor Mast Mount Version of LPA-1..... $59.95

**PIC-Pro Pic Chip Programmer**

Easy to use programmer for the PIC16C84, 16F84, 16F83 microcontrollers by Microchip. All software - editor, assembler, run and program - as well as free updates available on Ramsey download site! This is the popular unit designed by Michael Covington and featured in Electronics Now, September 1998. Connects to your parallel port and includes the great looking matching case, knob set and AC power supply. Start programming those really neat microcontrollers now...order your PICPRO today!
PIC-1, PICPRO PIC Chip Programmer Kit..... $59.95

**FM Station Antennas**

For maximum performance, a good antenna is needed. Choose our very popular dipole kit or the Comet, a factory made 5/8 wave colinear model with 3.4 dB gain. Both work great with any FM receiver or transmitter.
TM-100, FM Antenna Kit..... $39.95
FMA-200, Vertical Antenna..... $114.95

**Order Toll-free: 800-446-2295**
Sorry, no tech info, or order status at 800 number
For Technical Info, Order Status
Call Factory direct: 716-924-4560

**RAMSEY ELECTRONICS, INC.**
793 Canning Parkway Victor, NY 14564
See our complete catalog and order on-line with our secure server at:
**www.ramseyelectronics.com**

VISA MasterCard AMERICAN EXPRESS DISCOVER

*ORDERING INFO:* Satisfaction Guaranteed. Examine for 10 days, if not pleased, return in original form for refund. Add $6.95 for shipping, handling and insurance. Orders under $20, add $3.00. NY residents add 7% sales tax. Sorry, no CODs. Foreign orders, add 20% for surface mail or use credit card and specify shipping method.

# Events CALENDAR

ARC, Al Norton K7IEY, email: k7iey@netscape.net

### November 4-5

**GA - LAWRENCEVILLE** - Hamfest. Gwinnett County Fairgrounds. Sat: 9am-5pm, Sun: 9am-3pm. Talk-in: 145.45-(PL107.2), 444.25+ (PL131.8), 146.76-(PL107.2). Alford Memorial RC, 770-410-3989. Email: KR4NQ@bigfoot.com Web: www.totr.radio.org
**TX - ODESSA** - Hamfest. Ector County Coliseum, Bldg. D, 42nd & Andrews Hwy. 8am-5pm. VE Testing. Talk-in: 145.470/444.425/HF 3.922. West TX ARC, Craig Martindale W5BU, 915-366-4521. Email: w5bu@hotmail.com

### November 5

**IA - DAVENPORT** - Hamfest. IA National Guard Hangar, Mt. Joy Airport. Davenport RAC, Dave Mayfield W9WRL, 309-762-6010 or 309-757-1880. Email: hamfest@gwltd.com Web: http://www.gwltd.com/hamfest
**MA - FRAMINGHAM** - Hamfest. Framingham ARA, Beverly Lees N1LOO, 508-626-2012
**MI - ST. JOSEPH** - Hamfest. Playland Hall. 8am-12pm. VE Testing. Talk-in: 146.82-146.72 (if 82 is down). Blossomland ARA, Duane Durflinger KX8D, 616-982-0404. Email: comdac@comdac.com
**PA - LINGLESTOWN** - Hamfest. Firehall, 5901 Linglestown Rd. VE session. Talk-in: 145.47. Central PA Repeater Assn., Harold Baer KE3TM, 717-566-8895
**WI - APPLETON (KAUKAUNA)** - Hamfest. Starlite Club, Corner Hwy. 55 & CR JJ. VE sessions. Talk-in: 146.52. Fox Cities ARC, John Ensley N9RJZ, 920-830-3194. Email: n9rjz@arrl.net Web: http://www.w9zl.ampr.net

### November 11

**AL - MONTGOMERY** - Hamfest. S. AL State Fairgrounds, Garrett Coliseum, Federal Dr. 9am-3pm. FCC Exams. Talk-in: 146.24/84. Montgomery ARC, Phil C. Salley K4OZN, 334-272-7980. Email: k4ozn@arrl.net Web: http://jschool.troyst.edu/~w4ap/
**CA - FONTANA** - Inland Empire ARC Amateur Radio & Electronics Swapmeet. A B Miller High School. Bill 909-822-4138 eves
**CO - GOLDEN** - Hamfest. Jefferson County Fairgrounds, 15200 W. 6th Ave. 8am-2pm. VE Testing. Talk-in: 144.62/145.22 MHz. Rocky Mountain Radio League, Inc., Ron Rose N0MQJ, 303-985-8692. Email: n0mqj@arrl.net
**FL - PORT ST. LUCIE** - Hamfest. Port St. Lucie ARA, Roy Cox KT4PA, 561-340-4319. Email: roycox@ecqual.net Web: http://www.qsl.net/pslara
**TX - AZLE** - Hamfest. Tri County ARC of North TX, Jerry Buxton N0JY, 817-523-4426. Email: n0jy@arrl.net Web: http://www.qsl.net/tcarc-ntx/nctech.html

### November 17-18

**MS - OCEAN SPRINGS** - Hamfest. West Jackson County ARC, Phil Hunsberger W9NZ, 228-872-1499. Email: w9nzl@juno.com

### November 18

**FL - CORAL GABLES** - Hamfest. University of Miami, Physics Parking Lot. Talk-in: 146.865. U of M ARC, Bill Moore WA4TEJ, 305-264-4465 (day). Email: WA4TEJ@beethoven.com
**LA - WEST MONROE** - Hamfest. The Barak Shrine Temple. Talk-in: 146.85. Twin City Ham Club, Jim Ragsdale W5LA, 318-396-9529. Email: W5LA@hamtutor.com Web: http://www.tchams.org/users/hamfest
**MA - NEWTONVILLE** - Auction. Newton Masonic Hall, 460 Newtonville Ave. 11am-4pm. Talk-in: 146.64-. Waltham ARA & 1200 RC, Eliot Mayer W1MJ, 617-484-1089. Email: w1mj@amsat.org Web: http://www.wara64.org/wara/auction.htm
**OH - GEORGETOWN** - Hamfest. Grant ARC, Dot Silman KB8TQU, 937-446-2234. Email: huggee@bright.net Web: http://www.qsl.net/~n1djs

### November 18-19

**IN - FORT WAYNE** - State Convention. Allen County War Memorial Coliseum and Exposition Center, 4000 Parnell Ave. Sat: 9am-4pm, Sun: 9am-3pm. ACARTS, James Boyer KB9IH, 219-489-6700. Email: jboyer@ail.com Web: http://www.acarts.com

### November 19

**NC - BENSON** - Hamfest. Johnston ARS, Paul Dunn KD4BJD, 919-894-3100

### November 25

**FL - OCALA** - Hamfest. Booster Stadium, N.E. 36th Ave. 8am-2pm. Talk-in: 146.97 or 146.61. Marion County Repeater Owners Assn. & Silver Springs RC, Mario N4TSV, 352-472-2240. Email: n4tsv@amsat.org
**IN - EVANSVILLE** - Hamfest. Vanderburgh County 4-H Center Fairgrounds Auditorium. 8am-2pm. Talk-in: 145.150-Evansville 146.925- and 443.925+ Vincennes. EARS, Neil Rapp WB9VPG, 812-479-5741. Email: earsham@aol.com Web: http://members.aol.com/earsham/hamfest.htm

## DECEMBER 2000

### December 2

**GA - CLAXTON** - Hamfest. Claxton AR Emergency Service (CARES), Ellie Waters W4CJB, 912-653-4939. Email: ellie@premierweb.net

### December 2-3

**FL - PALMETTO** - Hamfest. Manatee County Convention and Civic Center, 1 Haben Blvd. Talk-in: 146.730. FGCARC, Jean Endicott KC4KZU, 727-525-5178. Email: kr4yl@arrl.net Web: http://www.fgcarc.org


**Lightwave 2000 Flashlight**
**$29.95**

*Four super-bright white LEDs replace the bulb you'd find in a traditional flashlight, providing a long-lasting high-intensity light. LED lights mean your flashlight will last about 14 times longer than a regular flashlight, and these flashlights are waterproof and shockproof. Ideal for short-range use in cars, planes, etc. Flashlight requires 3 AA batteries (included). Manufacturer's limited lifetime warranty even includes the LED lights!*

universal programmable remote control
$24.50

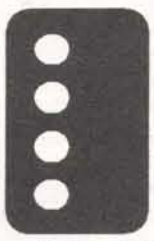

Easily copy your existing remote controls for garage doors, home security systems, car alarms, door locks, and remote starters.* Use the remote you haven't lost yet to create a spare, or combine your car alarm remote and your door security system remote on one keychain unit. Easy cloning instructions included. (Note: if your existing remote is code hopping, you will not be able to clone it successfully.)

**Infrared Non-Contact Laser Thermometer**
*introductory price* $149.95

This is such a cool thing, you gotta get one! No more climbing ladders or going down manholes trying to find temperatures. Are the rafters hot? How hot is that car? Point this little gizmo at almost anything and it will give you the temperature! Uses a laser sighting to help confirm target, and features an easy to read large LCD. Fahrenheit or Celsius selectable. Features a 0.95 emissivity, 8:1 distance to spot ratio, 0.1 resolution, and a temperature range of 14 to 950 degrees Fahrenheit. Manufacturer's 3-year limited warranty.
*shipping this item requires insurance, please add an additional $0.50

surf's up! **www.gateweayelex.com**

**Lighted Screwdriver Supertool!**
**$9.95**

At first glance, this appears to be an ordinary screwdriver, but press a button on the base and two lights illuminate the area you are working on. Nifty, huh? But wait, there's more! The seven interchangeable bits are stored right there at the base of the screwdriver (6 storage slots) for easy access. No handles to unscrew or tool boxes to dig through. Hey, you ain't seen nothin' yet...remove the bit and the magnetic retrieval tool telescopes from the screwdriver shaft! Incredible!!! Of course, the comfort grip handle and rugged construction are icing on the cake! Definitely a 'gotta have it' tool!

Reading this little tiny space will get you a free gift with purchase...go to our website, place your order online, and click on the Nuts & Volts box on our home page!!

Spinney The Wind-Up Critter $8.50

Wind up this little guy and watch him go! Spinney shakes, bounces, and buzzes around on four wire legs.

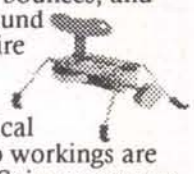

Classic mechanical wind-up workings are visible as Spinney amuses onlookers. Get creative, design your own outer casing for the Spinney to create your own wind-up creature! Great conversation piece, fun gift for anyone mechanically inclined.

*Think Spinney's cute? Check out some of his friends... the newest members of the family are Sparklz, a wind-up that emits flint sparks as it moves. $12.95 And Cosmojetz, a hyper-spastic wind-up who flips and flutters, tipping and turning on all sides. $8.50*

SPECTRUM LED
A RAINBOW OF LIGHT!
$5.95

Imagine an LED capable of producing all three primary colors in the same package! The entire spectrum, including near-white, can be created! Imagination becomes reality with this T 1-3/4 multi-color LED. Here's the technology: a red chip, a green chip, and two blue chips encased in a diffused T1-3/4 package. Using various current combinations, you can produce red, orange, yellow, green, aqua, blue, violet or white light! Detailed spec sheet included. What can you do with these (beyond the obvious amaze your friends!)? Create a single indicator system, designate various controls by color, make a multi-color bargraph, make your project something out of the ordinary with multicolor LEDs!

**www.gateweayelex.com**

gateway ELECTRONICS, INC

8123 PAGE BLVD * ST. LOUIS, MO 63130 * (314)427-6116
9222 CHESAPEAKE DR. * SAN DIEGO, CA 92123 * (858)279-6802
2525 FEDERAL BLVD. * DENVER, CO 80211 * (303)458-5444
MAIL ORDERS CALL TOLL-FREE 1-800-669-5810
FAX ORDERS (314)427-3147

nv0900

THE FINE PRINT : PRICES SUBJECT TO CHANGE WITHOUT NOTICE * GATEWAY IS NOT RESPONSIBLE FOR PRINTING ERRORS * MASTERCARD, VISA AND DISCOVER ACCEPTED * YES, WE'LL TAKE YOUR CHECK -- SORRY, NO C.O.D.s * $10 MERCHANDISE MINIMUM ON MAIL ORDERS * SUPPLY OF SOME ITEMS IS LIMITED * PRICES DO NOT INCLUDE SHIPPING * UPS GROUND SHIPPING/HANDLING WITHIN THE CONTINENTAL U.S. (ITEMS REQUIRING ADDITIONAL AMOUNTS ARE NOTED)...$6.25 FOR THE FIRST ITEM, $0.50 FOR EACH ADDITIONAL ITEM. RESTOCKING CHARGE MAY BE ASSESSED ON RETURNED ITEMS. * How Do Crazy People Walk Through The Forest?...They Take The Psycho Path!!!





Write in 49 on Reader Service Card.

2539 W. 237th Street, Bldg. F, Torrance, CA 90505
Order desk only: USA: (800) 872-8878 CA: (800) 223-9977
L.A. & Technical Info: (310) 784-5488 Fax: (310) 784-7590
http://www.digisys.net/timeline

# TIMELINE INC.

Over 14 years and 32,000 customers and still growing

Minimum Order: $20.00. Minimum shipping and handling charge $5.00. We accept cashiers checks, MC or VISA. No personal checks or COD's. CA residents add 8.25% sales tax. We are not responsible for typographical errors. All merchandise subject to prior sale. Phone orders welcome. Foreign orders require special handling. Prices subject to change without notice. 20% restocking fee for returned orders.

## Liquid Crystal Displays

**240x64 dot LCD with built-in controller.**
AND 4021ST-EO. *Unit is EL back-lit.* $49.00 or 2 for $89.00 *or*
OPTREX. DMF5005 *(non back-lit)* $39.00 or 2 for $69.00
20 character x 8 line 7¾L x 2½H *The built-in controller allows you to do text and graphics.*

**240x128 LCD** *with built-in controller.* **$49.00**

**256x128 LCD** *with built-in controller.* **$49.00**

**Alphanumeric—parallel interface**

| | | | | | |
|---|---|---|---|---|---|
| 16x1 | $6.00 | 20x2 | $8.00 | 32x2 | $8.00 |
| 16x1 (lg. char.) | $8.00 | 20x4 | $8.00 | 40x1 | $8.00 |
| 16x2 | $6.00 | 20x4 (lg. char.) | $10.00 | 40x2 | 2 for $20.00 |
| 16x2 (lg. char.) | $10.00 | 24x2 | $8.00 | 40x4 | $20.00 |
| 16x4 | $12.00 | 32x4 | $10.00 | 4x2 | $5.00 |

5V power required • Built-in C-MOS LCD driver & controller • Easy "microprocessor" interface • 98 ASCII character generator • *Certain models are backlit, call for more info.*

**Graphics and alphanumeric—serial interface**

| size | Mfr. | price | size | Mfr. | price |
|---|---|---|---|---|---|
| 640x480 (backlit) | Epson | $20.00 | 480x128 | Hitachi | $10.00 |
| 640x400 (backlit) | Panasonic | $15.00 | 256x128 | Epson | $20.00 |
| 640x200 | Toshiba | $15.00 | 240x128 (backlit) | Optrex | $20.00 |
| 480x128 (backlit) | ALPS | $10.00 | 240x64 | Epson | $15.00 |
| | | | 160x128 | Optrex | $15.00 |

**6" VGA LCD** 640X480, Sanyo LMDK55-22 **$19.00**

## Monitors

**Non-Enclosed TTL**
Comes with pinout. 12V at 1.4 Amp input • Horizontal frequency 15Khz. • Ability to do 40 and 80 column.
**5 inch Amber $19.00 • 7 inch Amber $19.00**
**9 inch Amber or Green $19.00**

**5" COLOR MONITOR $29.00**
• Flat Faceplate • 320 x 200 Dot Resolution • CGA & Hercules Compatible
• 12 VDC Operation • 15.75 KHz Horiz. Freq. • 60 Hz Vert. Sync. Freq.
• Open Frame Construction • Standard Interface Connector • Degaussing Coil included • *Mfr. Samtron*
2 for $49.00

## Hacker Corner

**EMBEDDED 486 COMPUTER**
**$79.00 2 for $149.00**
Complete enhanced Intel 486SX-33 based computer in ultra small (9-7/8L x 6-5/8W x 3-1/8H) case. Ideal for embedded operations or as a second computer. Features include: • One 16 bit ISA slot • 3 serial ports plus dedicated printer port • Parallel optical coupled adapter port • Built in IBM PC/AT keyboard port • On board VGA video and port • Uses standard SIMM up to 32 MB • BIOS is PC/AT compatible
Unit has a backup Ni-Cd battery system in case of power failure (5 min. backup time) and lockable front cover to prevent floppy drive access. Mounting / interface provisions for standard 3.5" laptop floppy and 2.5 inch hard drives. Comes with very comprehensive manual.

**NTSC COMPOSITE 4" LCD MONITOR $69.00**

**ROCKWELL™ "JUPITER" GPS RECEIVER $69.00**
Miniature (2.75" x 1.5" x .25") 12 channel receiver engine • Supports NMEA 0183 and binary protocols • Supports DGPS input in both protocols • Compatible with active and passive antennas • "Keep-Alive" reduced power capability • Standard 2mm 2x10 interface connector • Complete manual and interface documentation available • Compatible with most laptop software using NMEA interface • Suitable for wide range of GPS applications including: Handheld GPS, Automotive / Marine / Aviation Applications, Amateur APRS and Packet.

**SONY Miniature Color LCD Display (LCX005BKB) $29.00**
• 1.4 CM (0.55 inch) Diagonal Full Color Display • Built In Horizontal and Vertical Drivers • Delta Dot Pattern for High Picture Quality - 537 dots (H) x 222 dots (V) • Compatible with NTSC & PAL Format and Sync Inputs • 12 VDC Operation with -1 to +17 V RGB Signal and Driver Input Voltage • Excellent Display for Virtual Reality Projects, Viewfinders, and Miniature Test Equipment Displays • Pin Outs and Specification Included • Unit Requires Clock, Synchronization and Video

1.8cm (0.7 inch) unit LCX009AKB 827H x 228V **$29.00**

**CELL SITE TRANSCEIVER $29.00 2 for $49.00**
These transceivers were designed for operation in an AMPS (Advanced Mobile Phone Service) cell site. The 20 MHz bandwidth of the transceiver allows it to operate on all 666 channels allocated. The transmit channels are 870.030-889.980 MHz with the receive channels 45 MHz below those frequencies. A digital synthesizer is utilized to generate the selected frequency. Each unit contains two independent receivers to demodulate voice and data with a Receive Signal Strength Indicator (RSSI) circuit to select the one with the best signal strength. The transmitter provides a 1.5 watt modulated signal to drive an external power amplifier. channel selection is accomplished with a 10 bit binary input via a connector on the back panel. Other interface requirements for operation are 26 VDC (unregulated) and an 18.990 MHz reference frequency for the digital synthesizer. The units contain independent boards for receivers, exciter, synthesizer, tunable front end, and interface assembly (which includes power supplies and voltage-controlled oscillator). Service manual, schematics and circuit descriptions included.

Write in 35 on Reader Service Card.


## HAM GEAR FOR SALE

**PRACTICAL ANTENNA HANDBOOK,** by Joseph Carr. The most popular book on antennas ever written, widely known as "the antenna builder's bible." This *Third Edition* is a work for anyone with an interest in antennas, from the newest of novices to the most experienced engineer. This empowering book gives you all kinds of projects and material that explains why what you did works. Only $49.95! **10% discount to *Nuts & Volts* subscribers.** Call **1-800-783-4624** to order using Visa or MasterCard.

**SECRETS OF RF CIRCUIT DESIGN** From Joseph Carr, one of today's most respected electronics authors, comes this pragmatic, intermediate-level guide to designing, building, and testing all types of radio frequency circuits. Filled with functional projects that demonstrate the principles of RF circuits. Only $29.95! **10% discount to *Nuts & Volts* subscribers.** Call **1-800-783-4624** to order using Visa or MasterCard.

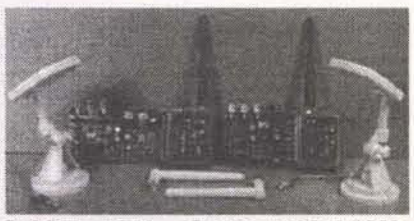

**2.4GHz ATV — 8 channel TRANSMITTERS AND RECEIVERS.** 35mW output power, 1 video channel, 2 audio. SMA connectors. NTSC/PAL compatible. Includes 1/4 wave rubber duck antenna. Standard frequencies are: 2398, 2405, 2412, 2416, 2420, 2428, 2435, 2442 MHz. Custom frequencies are available. See ad in this section for power amplifier. **$79/each for transmitter. $79/each for receiver.** Seabrook, 972-480-0060 (Texas, CST) or E-Mail: main@480i.com Web: www.480i.com

**WANTED: MILITARY** capacitors, resistors, transistors, diodes, ICs, semi's, etc. Please fax/E-Mail excess lists & RFQs 818-769-1002 fax 818-769-1084. electmatind@earthlink.net & http://www.militarycomponents.com

**WANTED: ROCKWELL**-Collins HF-80 equipment, 851S-1, 237B-3 log periodic, Collins literature. Jim Stitzinger 805-259-2011, 805-259-3830 (fax), bfl-jfs@smartlink.net

**1.2GHz ATV — 8 channel TRANSMITTERS and RECEIVERS.** 75mW output power, 1 video channel, 2 audio. SMA connectors. NTSC/PAL compatible. Includes 1/4 wave rubber duck antenna. Standard frequencies are: 1250, 1255, 1260, 1265, 1270, 1275, 1280, 1290 MHz. Custom frequencies are available. **$79/each for transmitter. $79/each for receiver.** Seabrook, 972-480-0060 (Texas, 9-6PM CST). E-Mail: main@480i.com Web: www.480i.com

**2.4GHz POWER** amplifier with power supply. 10-40 mW input, 1 (one) watt output with in-line SMA connectors and built-in heat sink. Approx. 2" x 2" x 5/8" size. Frequency range 2.3GHz-2.5GHz. **$189/each.** Compatible with all ATV product lines. See our website for more info on accessories and transmitter and receiver modules. Seabrook, 972-480-0060 (Texas, 9-6PM CST). E-Mail: main@480i.com Web: www.480i.com

## HAM GEAR WANTED

## CB — SCANNERS

**EXPORT RADIOS** & accessories, scanners, microphones, power supplies, amps, repairs, modifications, much more! Here 15 yrs! Picture price sheets $1 (refundable). Galaxy, Box 1202, Akron, OH 44309.

**CBs, ACCESSORIES, SCANNERS, ANTENNAS, MICROPHONES, COAX.** Best prices! Call 1-800-821-2769 for current flyer. We also carry NIMH batteries and chargers. http://www.thomas-distributing.com **THOMAS DISTRIBUTING, 128 Eastwood, Paris, IL 61944.**


# 'SX-ISD' Debugger+Programmer

**Qualified by and inhouse tool for Scenix Semiconductor**

**Now supporting the 100 mhz SX**

- In-system debugger for SX18/20/28/48/52
- Built in programmer
- Full speed emulation
- Real-time in-system code execution and breakpoint
- Frequency synthesizer from 25khz to 75mhz / 120mhz*
- External oscillator support to 90 mhz / 100mhz*
- Source level debugging for SASM, SXC and more
- Selectable internal frequencies
- External break and clock inputs
- Conditional animation break and Software animation trace
- IDE runs under Win 95/98/2000/NT4 via parallel port
- Comes with SASM Assembler, SXDEMO board, SX28AC device and 18-pin, 28-pin SDIP headers

From **$295***

* SX-ISD ..... $295 (synthesize to 75mhz, external OSC support to 90-95mhz)
* SX-ISD100 ... $350 (synthesize to 120mhz, external OSC support to above 100mhz)

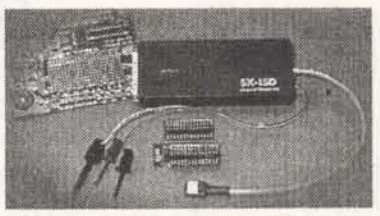


## Also Available...

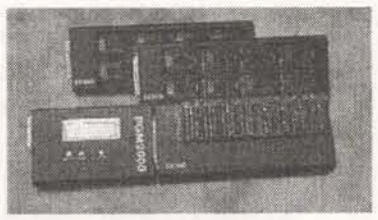


**PGM2000 Gang Programmer**
- Stand alone 8 gang programmer
- Parallel Port Interface for on-line operation
- Different 8-socket DIP, SOIC, SSOP, TQFP, PQFP adapters for all SX18/20/28/48/52
- Adjustable programming voltages in 0.1V
- Codes and fuse reside securely in EEPROM of Master Control Unit
- Comes with Win 95/98/2000/NT4 software
- Also supports other processors via different 8-socket adapter modules
- Starts at $900 with one 8-up DIP adapter

**PGM-SX Programmer**
- Parallel Port Interface
- 40-pin ZIF socket to carry device to be programed or program in-circuit
- Win 95/98/2000/NT4 software
- Comes with SASM assembler
- Optional SOIC, SSOP, TQFP and PQFP programming sockets
- PGM-SX $149, SMT adapters $120

*Advanced* **TransdAtA**
14330 Midway, #128, Dallas, Texas
Tel 972.980.2667 Fax 972.980.2937
Email: atc1@ix.netcom.com

**www.adv-transdata.com**

Write in 36 on Reader Service Card.

# KIT BUILDING IS FUN AND EASY!

***PORTABLE SWL RECEIVER***

Enjoy quality shortwave listening comparable to factory built portables. Listen to local and international AM broadcast as well as SSB/CW from around the world.

- Covers 100 kHz - 30 MHz
- 15 programmable memories
- 2.5 kHz and 100 kHz tuning steps with clarifier
- Dual conversion, superheterodyne
- 13.8 VDC operation; AC wall transformer included
- 2.25" H x 6.5" W x 6.5" D

**1254**.....**$195***

Portable SWL Receiver

***9-BAND SWL RECEIVER***

9-Band SWL Receiver

Modernized "first radio kit" classic. Five transistor, 3 IC design, electronic bandswitch. Tune both AM broadcast and SSB/CW from 1.8 - 22 MHz. Has Main and Fine tuning, Regen, RF gain, Volume. Powerful audio to built-in speaker, your own speaker or stereo phones. Use 8 C cells or ext. 12 VDC.

**1253**.....**$59***

***HI-SENSITIVITY AUDIO AMPLIFIER***

Hi-Sensitivity Audio Amplifier

A versatile utility amplifier with high and low Z inputs and switchable preamp. 1.5-watt audio output via internal speaker or user earphones. Experiment with listening to the sound of energy with the included project booklet. Hear radar, light waves, lightning, and much more. Requires 12 - 15 VDC.

**1252**.....**$44***

***ONLY $24 FOR 4-BAND RECEIVER***

4-Band Receiver

This little Regen beats the pants off those favorite 3-tube radios of the 1950s. Covers 49- and 31-meter SW bands, 40- and 20-meter ham bands plus 12 - 15 MHz. Includes punched and labeled front panel. Dress it up later with your own case and knobs. Has push-button bandswitch, Main Tuning, Regen control, volume and on-off switch. You provide DC, stereo phones, or speaker.

**1054**.....**$24***

Popular group project - buy 5 for $110!

## BUDGET-PRICED PC BOARD PROJECTS

Includes etched and silk-screened board, all parts, and step-by-step construction manual.

***ACTIVE ANTENNA***

Bring any HF receiver to life with this active antenna and a short wire or simple whip. Includes gain control.
Model 1552 - $12*

***HAM BAND SSB/CW RECEIVER***

Direct conversion receiver on a PC board. We supply everything to build it, to change it, to any HF ham band 160 - 10 meters. You supply DC, speaker, or headphones.
Model 1056 - $29*

***UNIVERSAL BFO***

Add SSB/CW reception to your AM-only SW radio. Internal connection not necessary. Tuning control allows for compensation of alignment in AM receivers and fine-tining of SSB/CW signals. Model 1050 - $9*

***BROADBAND RF PREAMP***

Low noise, broadband, untuned preamp in front of your receiver, scanner or instrument. 15dB gain, 1 - 1000 MHz.
Model 1001 - $9*

***UTILITY AUDIO AMP***

Reliable, inexpensive audio amp for homebrewing. A low distortion 1.5 watts without motorboating or unwanted oscillation. Includes 10 dB preamp.
Model 1550 - $10*

***FM BAND FOXHUNT TRANSMITTER***

"Beep-beep" modulation audible on 88 - 108 MHz FM receivers. Use for direction-finding, hidden transmitter hunts or use sveeral to demonstrate triangulation.
Model 1059 - $12*

*Plus shipping & handling

***CALL FOR A FREE CATALOG TODAY - 865-453-7172***

Includes these kits and more budget-priced projects.

Orders only: 800-833-7373
FAX: 865-428-4483
E-Mail: sales@tentec.com
9:00 a.m. - 5:30 p.m. EST
Monday - Friday

...America's Best!
TEN-TEC

Visit our web site at www.tentec.com

or write us at: T-Kit
a div. of TEN-TEC, Inc.
1185 Dolly Parton Pkwy.
Sevierville, TN 37862

© Copyright 2000

Write in 37 on Reader Service Card.


**CB MODIFICATIONS! Frequencies, books, kits, high-performance accessories, plans, repairs, amplifiers, 10-meter conversions. The best since 1976! Catalog $3. CBCI, Box 1898NV, Monterey, CA 93942. www.cbcintl.com**

**240+ CHANNEL** CB/HAM/FRS/COMMERCIAL radios: AM/FM/SSB/CW export/domestic: RCI, TEKK, Motorola, Uniden, Cobra, Alinco, Kenwood. Mics, antennas, linears, meters, mod books, manuals, schematics, night scopes, and tons more stuff! Catalog $3. MAXTECH, Box 8086, New York, NY 10150. 718-547-8244. www.pennycircus.net

## MUSIC & ACCESSORIES

## COMPUTER HARDWARE

**ISO7816 PROGRAMMER** built $150. Kit $125. No software. Blank smart cards $20.00 or 8/$100. Tony 419-385-3100.

**WE CARRY** a variety of cables, switch boxes, accessories, and adapters to connect PCs, printers, Mac's, networks, telecommunications, and audio/video equipment. We offer: custom cables, free catalogs, and same day shipping on most orders. Visit our website at www.rogerssystems.com or call 1-800-366-0579.

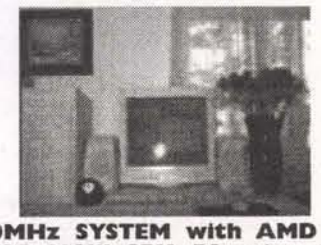

**500MHz SYSTEM with AMD K6 II 3D NOW CPU,** 7.5 gigabyte drive, 52X CD-ROM, floppy, 32MB memory, 8MB video, 2 USB ports, LAN, 56K modem/voice/fax, sound, speakers, keyboard, Internet mouse, microphone, ATX case, Windows 95, much software, 2 year warranty, only $399. Order now 847-657-1160 or www.saveware.com

**533MHz BAREBONE** systems from $199. 486 computers $49. Brand name Pentiums from $199. Motherboards $20, color printers $75, 1.44/1.2 floppies, speakers $10. 714-778-0450.

**PARTS PARADISE Monthly Special**. Behold, network nirvana — DSL/cable modem router $109. 10/100 full duplex switches: 16 port $179, 8 port $79, 5 port $69. 10BaseT hubs: 16 port $59, 8 port w/BNC $32, 8 port $29. Cards: 10/100 PCI Realtek $11, 10BT ISA SMC $15. Quality booted cat 5 cables: 3' $1, 7' $1.50, 10' $2, 14' $3, 25' $4, 35' $6, 50' $7.50, 70' $12, 100' $14. (We have cross-wired cable too!) Cat 5 patch panels: 12 pt $39, 24 pt $59, 48 pt $129. Cable tester w/remote $45, hub/switch/card tester $99. RJ45 crimpers from $12, impact punch tool $25, 10 pk RJ45 ends $11, 1,000ft cat 5 $59, Keystone: plates $1, RJ45 cat 5 $2.50, RJ12 $1.45, TV $0.89, BNC $1.75, SVHS $10, ST fibre $7.50. Mention this ad &, $5 shipping anywhere in 48 states. All new & w/warranty. For catalog of 1,500+ items email PartsParadise@hotmail.com Check here for monthly specials. Visa/MC/AX accepted. 313-794-0172 or fax 313-794-0173.

**SONY PLAYSTATION GAME ENHANCER, mod-chip function plays backup COPY of CD**. You do not need to have original to play backup. Simply plug the enhancer in back of playstation! Skips both Sony logos, many preloaded cheat codes. More $29. MOD-CHIP plays backups, works with all models and games $19. Order now 847-657-1160 or www.saveware.com

**SPECIALS ON 9/5/00**: Samsung CDRW kit, 4x2x24, Adaptec software, 1 CDRW media $117. **Media**: CDR 6X Write, 50pk spindle $19, 80 min/700 MB 8X CDR, 12 pieces in neat Speed Pack reusable jewel case, $5.90. 74 min CDRW in jewel case, 30+ at $0.75 each, **IBM 20GB** Ultra 66 drive, 2MB buffer, $109. Much more at **www.ts.nu**, frequent pricing update for hot items like CPU or memory. Or request CD of our site, currently 700+ pages. Web pages by fax, too. 1-year or better warranty on all parts. tech-specialities, Inc., 5703 Heffernan, Houston, TX 77087-4113. 1-800-864-5391 for orders and tech support, fax: 713-307-0315.

**DEC EQUIPMENT WANTED**!!! We are buying DEC systems, boards, terminals, drives and peripherals. Also Scientific Micro Systems (SMS), DSD, Datability, Dilog, other DEC compatibles, and Computer Output Microfilm (COM) units. Please call for a quote or fax us your equipment list. We buy, sell, and trade. **KEYWAYS, INC.**, 937-847-2300 OR fax 937-847-2350.

**BRAND NAME** low-end Pentium computers starting at $50. Call Jerry W2GIA, Disks N Data, 1-800-833-6893 or E-Mail: dndcom@earthlink.net

**FOR SALE**: HP 85 w/IO ROM and 16K mem module $350 incl. shipping. HughMAdams@MSN.COM 1011 Hondo Avenue Apt. D, Ft. Walton Beach, FL 32547. 850-864-2414.

**FOR SALE**: HP Vectra ES/12 w/HP 560 color printer, Windows 3.1 HP Pavilion color monitor. All for $350 incl. shipping. HughMAdams@MSN.COM 1011 Hondo Avenue Apt. D, Ft. Walton Beach, FL 32547. 850-864-2414.

**LOOKING FOR cheap clone PC parts that actually work**? Call UTWE for hard drives, disk controllers, video cards, mainboards, etc. We also have network stuff like cables, cards, adapters, hubs, etc. NEW tape drives 700 meg $19 ea. 1 (or 2) meg PCI video cards $10 (or $15). 2GB 3.5" SCSI hard drive with cable and PCI controller $45. Remember, today we have it, tomorrow we don't! So email or call now. Case of 7 nearly new Epson keyboards, $21 ($3 ea.). There are other deals too! For the latest dealsheets send an email to dealsheets@utwe.com or call 626-930-1121 (10am-5pm Pacific) or fax 626-930-1123. Email: sales@utwe.com

**EVERYTHING NEW** w/warranty! Best prices. Motherboards with CPU 600MHz $195, custom configured systems, monitors 15" $125, Pentium systems from $195. Modems, multimedia kits, scanners, cases, $20. Hard drives all sizes to 80 gigabytes, 540 megabyte $20, 120 meg $5. Call 714-778-0450. E-Mail: **cci@surfside.net**

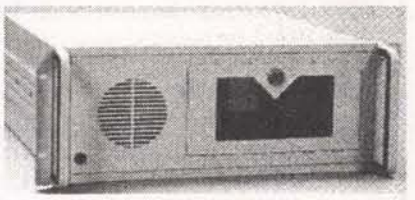

**19" RACKMOUNT** ATX PC chassis, $159 (with ad). 972-242-8087, www.cti-tx.com

**NEWTON MESSAGEPAD** 110 w/lid, connect 2 $50. Compaq LTE lite 4/25C laptop $150. Epson LQ-1050 wide carriage printer $30. Apple II books, 40 lbs., $15. M100 laptop w/extras $85. M100 books, programs $15. Shipping extra. Evenings 610-458-7535.

## COMPUTER SOFTWARE

**FREE!!! CD-ROM** and software disk catalog. **MOM 'N' POP'S SOFTWARE**, PO Box 15003-N, Springhill, FL 34609-0111. 352-688-9108. momnpop@gate.net

**FMSTUDY32 FM**, LPFM allocation studies. Manage FCC database on your PC! Manual included, $39.95. Demo, info, special Web pricing at http://members.xoom.com/fmstudy

**www.rascom1.com WIN98 UTILITIES.** Web site blocking firewall, keypad program launcher, demos, and special offers! E-Mail: **rascom@mediaone.net**

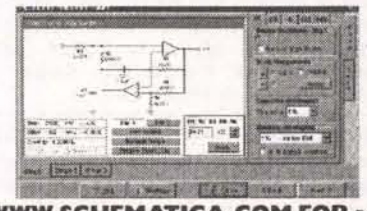

**WWW.SCHEMATICA.COM FOR** professional freeware and shareware. Active and passive filter design, 555 designer, linear simulators.

**CAM & MOTION SW/HW**: Z-trace, PCB toolpath. Plotcam motion control, step drivers. **www.megabits.net/ddt** FAX 321-452-7197, 321-459-2729. **heater@megabits.net**

**LIQUIDATION WINDOWS** 95/98, Office suites $10-69. Norton 3-in-1 a $150 value $20, Windows companion, Windows tutorials $5. 10 PACK grab bag $20. 714-778-0450.

**NEW MICROSOFT Windows Millennium is here!** More like Windows 98 than the Windows 2000 which is like NT, installs easy from desktop, new updated drivers. CD-ROM, manuals, certificate $139. Windows 95B only $39! B version has FAT 32 large partition support. Includes CD-ROM and boot floppy. Order now 847-657-1160 or www.saveware.com

**SEGA DREAMCAST BOOT CD-ROM**. This CD-ROM allows you to play CDR-BACKUPS and IMPORTS on your Dreamcast. Includes BOOTCD, instructions, & informational packet. For US Dreamcast's manufactured before 8/2000. Includes WWW/FTP places via Internet for downloads. $50+ shipping. 619-749-7788.

*Continued on page 56*

by Fernando Garcia

# Build A Model Rocket Launcher

Model rocketry is a fascinating hobby. Like many enthusiasts, I was introduced to it by a starter kit from Estes Industries. Since then, I have purchased, built, and lost literally dozens of models of all sizes. Those models come in all sizes and shapes, with all sorts of rocket motors and different impulses.

One thing has remained constant: the control launcher, shown in Photo 1, which has served me well over all these years. This is a very simple electrical device, powered by four "AA" batteries. The batteries provide the current to light up an igniter, which is basically a nichrome wire coated with a flammable mixture.

The igniter is placed inside the rocket motor, and as the battery current heats the wire and ignites the

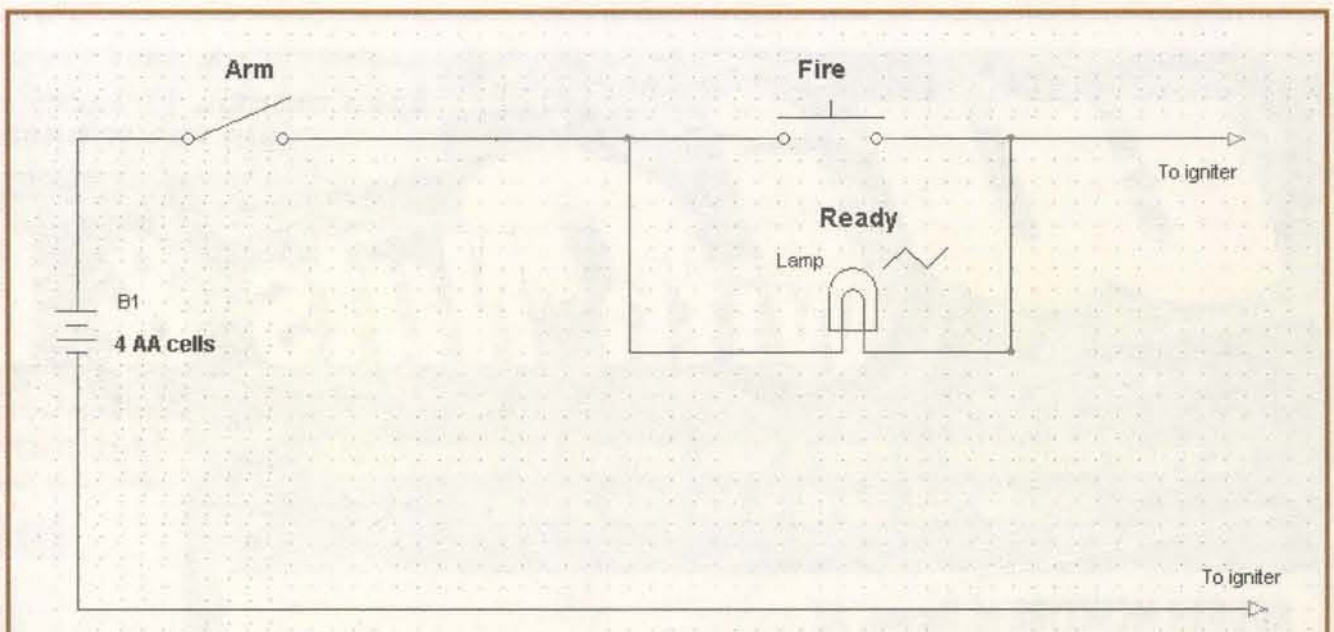


**FIGURE 1: OLD CONTROLLER SCHEMATIC.**

**PHOTO 1: THE TRUSTY OLD ESTES CONTROLLER.**

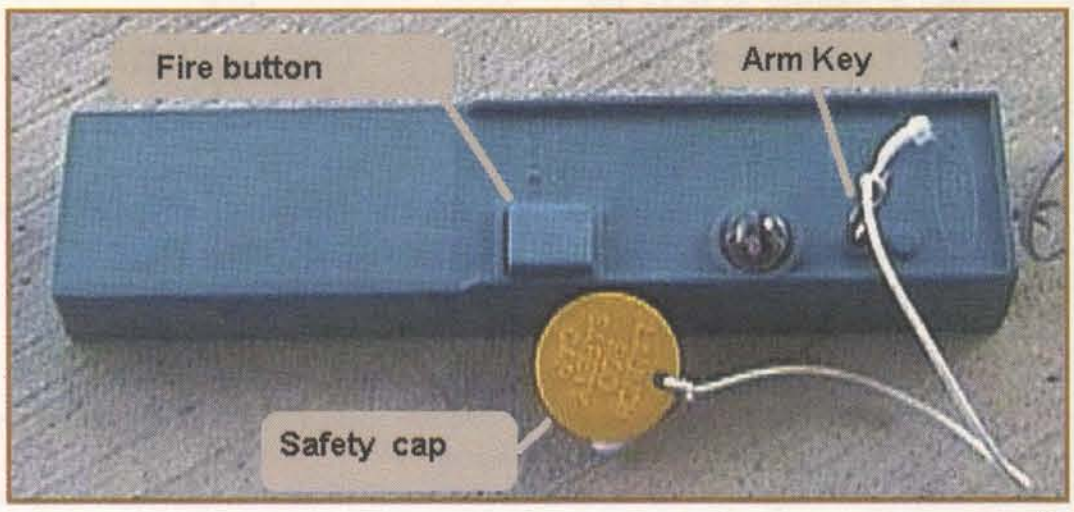

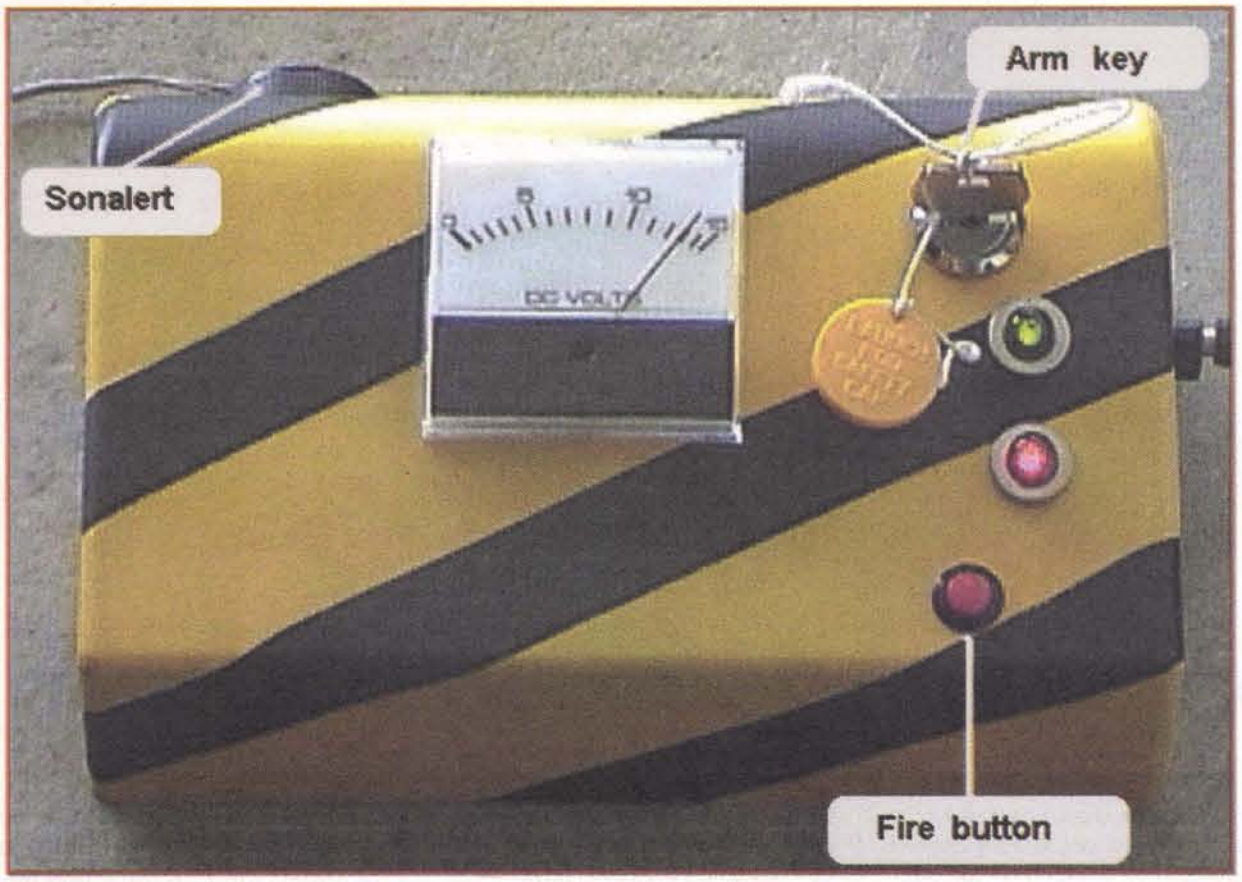


**PHOTO 2: THE NEW CONTROLLER MAINTAINS THE SAFETY FEATURES.**

flammable mixture it, in turn, will start the solid fuel inside the motor. The rocket will then fly under the motor's impulse until its fuel is depleted.

A crucial feature of the controller is safety, and it is taken care of by the controller's "arm key" shown in the photo.

Although the motors themselves are small, they can still produce serious burns and create a fire hazard should they ignite at the wrong time. Estes solved this problem in a simple but elegant way, which can be understood by looking at the launcher schematic in Figure 1.

The key (actually a pin) removes electrical continuity, thus preventing a premature engine start as the igniter is being placed. It also has attached to it a safety cap, which is used to cover the launching rod (thus avoiding an eye accident as you work around the launch pad).

Once the rocket pyrotechnics are set, the cap is removed from the rod and everybody goes back to the launch controller, set safely a couple dozen feet away. The key is then inserted in the appropriate position,


**Each month, 11 lucky names will be drawn!! Join the winners listed below!**

# Win with Nuts & Volts

**As a paid subscriber to Nuts & Volts, you will be automatically entered each month in our prize drawing!**

**RODGER MCINTYRE of Tucson, AZ**
**IAN CAMPBELL of Saginaw, TX**
**JAMES DAVIS of Lafayette, IN**
**D.S. WALKER of Klamath Falls, OR**
**HANK KOLESNIK of Tulsa, OK**
**CORDELL STEWARD of Bear, DE**
**STEVEN HAUSHAHN of Bismarck, AR**
**GARY SCHNAKENBERG of Pt. Pleasant Beach, NJ**
**THOMAS BELL of Mt. Airy, NC**
**CHRIS ABRELL of Columbia, KY**
**and**
**CHRIS HUNZIKER of Bullhead City, AZ**

**To Subscribe** – Just fill in and mail the card supplied in the magazine or call our toll free order line at **(800) 783-4624** with a Visa or MasterCard.

If you do not wish to order a subscription, but would like to be entered in our drawing, simply send or E-Mail your name, address, and telephone number to *Nuts & Volts*, 430 Princeland Ct., Corona, CA 92879 or drawing@nutsvolts.com. No phone entries accepted. All orders/entries must be received by the last day of the month to be included in that particular month's drawing.

This month's sponsor ...

## Intronics, Inc.

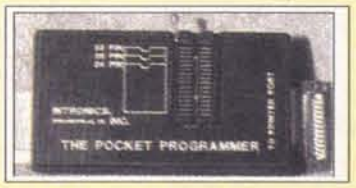


**The Pocket Programmer**
**A $130.00 value!!**

The Pocket Programmer uses the printer port of any PC instead of an internal card. This allows it to be used on laptops, as well as desktops, and makes it totally portable. The Pocket Programmer comes complete with a 3' cable, 9VDC wall power pack, and software.

**Check out Intronics, Inc. at www.intronicx.com or see their ad on page 61 of this issue!!**

**NETCOM (page 15) will continue to provide prizes monthly!**

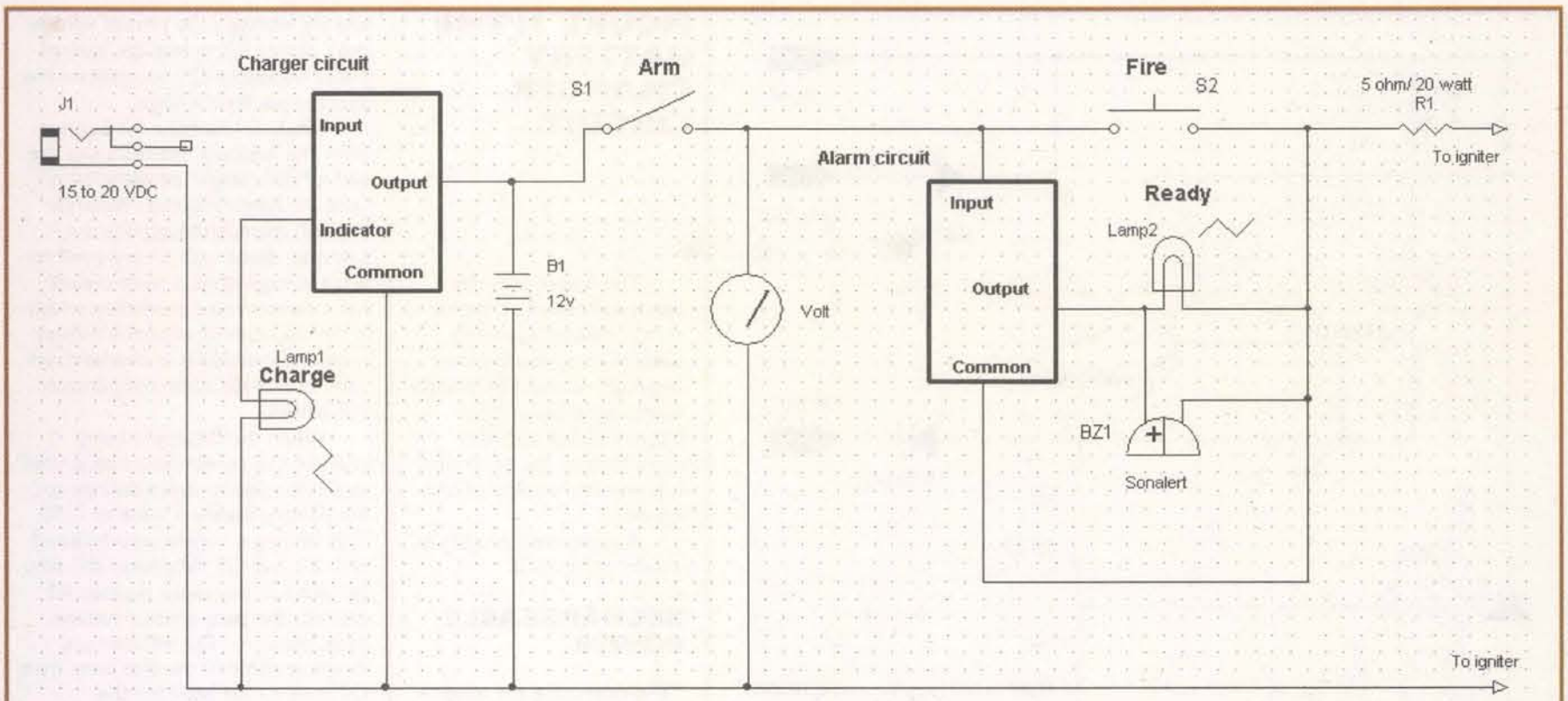


**FIGURE 2: NEW CONTROLLER SCHEMATIC.**

and although electrical continuity is now established, the current will still be limited by a miniature light bulb.

If the bulb fails to light up, an improper connection has been made and you have to remove the key and go back to the rocket to fix it. If the bulb is brightly lit, all systems are go. As you press the push button, the bulb is bypassed which allows the full battery current to light up the igniter, and hopefully you'll enjoy a successful launch.

Simplicity means ruggedness, but over many years of usage, the original launcher has become intermittent and a replacement has become necessary. Trusty and reliable as it is, I believe the original launcher can be improved upon.

The first aspect has to do with the limited energy available from the AA cells. This may not be an issue for a couple of launches, but the batteries become rapidly depleted afterwards. This means carrying a dozen batteries if several launches are attempted. Worse, you are never really sure when the batteries will not have enough juice left to fire the igniter, and many duds result as a consequence.

The second aspect has to deal with safety. The Estes controller is intrinsically safe, but with a crowded gathering of onlookers, it would be an added safety feature if an audible alarm sounded whenever the controller is armed and the rocket ready to be launched.

A third aspect was to employ a higher voltage than six volts, since the alligator clips that attach to the igniter become inevitably dirty from the combustion gases and thus intermittent connections are common. Thus the idea for this project, whose schematic is shown in Figure 2.

## THE CIRCUIT

The basic function of the launcher remains unchanged: to safely provide a means to fire the igniter. This is, of course, achieved with the gel-cell battery. Since this battery can provide much more short circuit current than AA cells, a limiting resistor R1 provides the appropriate current level. This resistor allows the current to be set more consistently as the battery discharges. With the AA cells, the batteries' internal resistance limited the current, but this impedance varies widely as the battery is depleted.

Also seen in the circuit is the safety key. Rather than rely on a simple pin, I employed a real key operated switch. To maintain the safety feature of the original controller, it is mandatory that the key be removable only in the OFF position.

The firing switch is a normally open, momentary type push button. As in the original controller, upon firing, it bypasses the READY lamp and alarm circuit, which is described below. Being in series with the igniter, these will provide a visual and audible indication of a properly


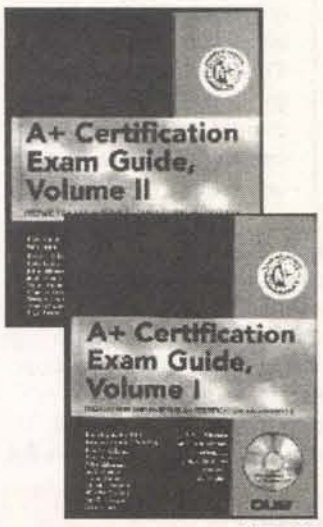


REGULAR PRICE: $199.99

SPECIAL $129.95

**They Wrote The Book**

***The A+ Certification Exam Guide was developed by IBM***, the company which set the standard for Personal Computing. It consists of two large volumes and a CD-ROM disk.

***If your goal is to become a certified Computer Service Technician***, the Guide is the only reference you should need to successfully prepare for the certifying exam. Over 2,000 pages, it is thorough, yet not cumbersome to use. And once you become a certified Technician, it is still useful as a reference.

***The A+ Certification Exam Guide was written by training-education specialists*** with the experience necessary to guide you through the information that is key to passing the exam. Difficult concepts are clearly explained, and topics and skills stressed on the exam are pointed out. In addition, the volumes include helpful graphics, diagrams, tables and charts.

***The CD-ROM disk***, which is part of the two volume set, not only contains the entire contents of both volumes, but also, hundreds of very useful sample test questions. There are also Self-Assessment sections at the end of each chapter in the Guide.

***This 2-volume set is also a tremendous reference work for anybody who wants to know how PCs work*** or what to do when they don't work.

***The A+ Certification Exam is sponsored by CompTIA.***

***This special price won't last long!!!***

**ORDER NOW!!!**

**800-854-7393**

**WEBSITE: www.graymarkint.com**

**Graymark®**

Write in 167 on Reader Service Card.

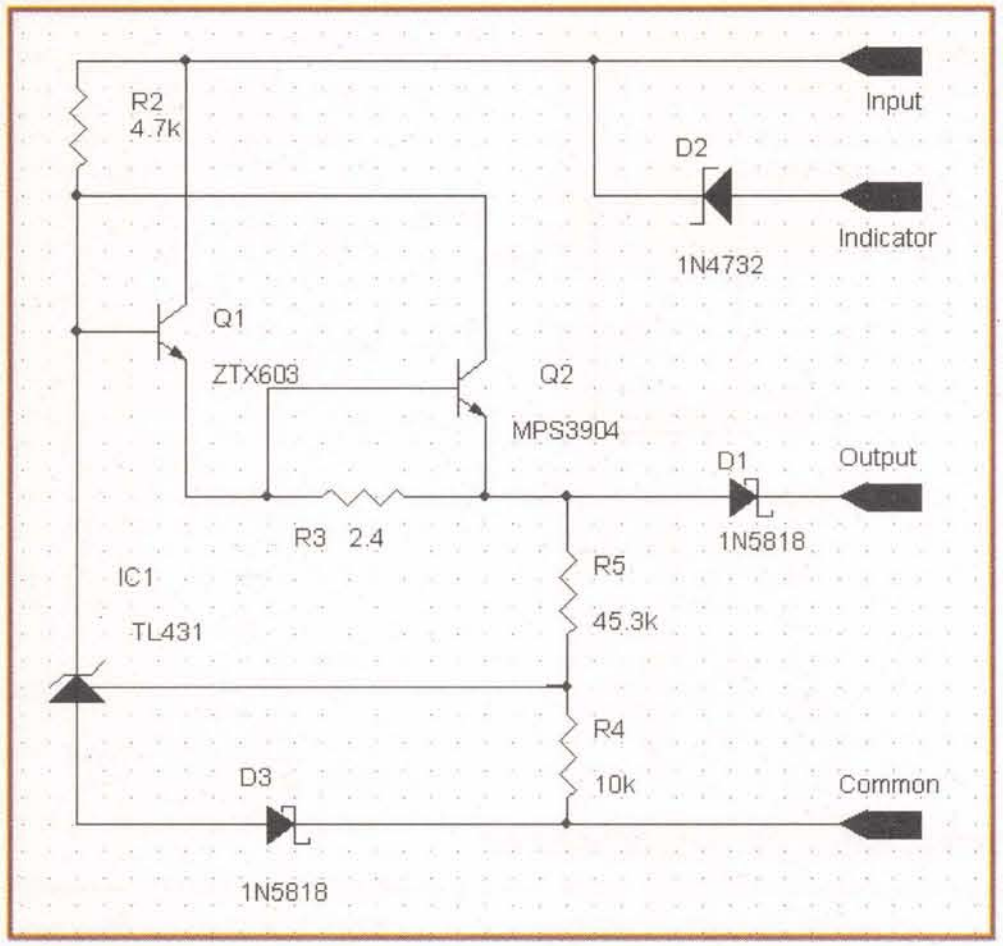


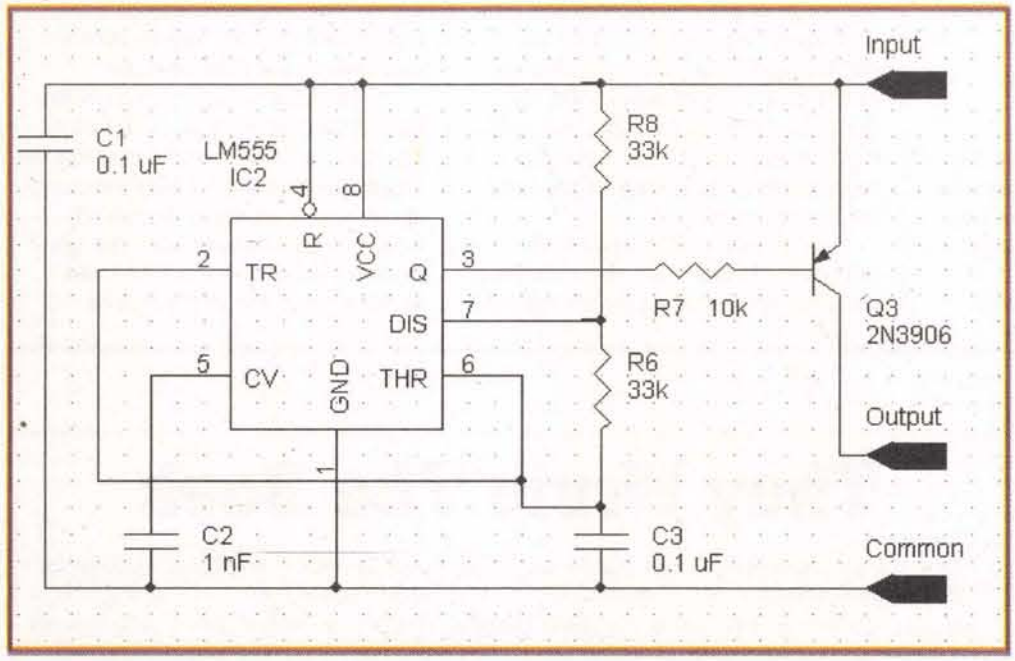


**FIGURE 3: THE BATTERY CHARGER CIRCUIT.**

**FIGURE 4: THE ALARM CIRCUIT USES A SIMPLE 555 TIMER.**

The meter provides a handy indication of the battery condition, especially useful if many launches are expected. It could be a dedicated digital panel meter, but in keeping with the retro look of the controller, I decided to employ an analog one.

A completed project is shown in Photo 2.

## RECHARGEABLE POWER

To overcome the alkaline cell limitation, a heftier power source is required, and preferably rechargeable. NiCad cells were considered, but like almost everybody else, I have had bad experiences with the memory effect of a cell fouling the capacity of the whole string. Lithium or metal-hydride are expensive, and its associated chargers complicated and usually beyond the reach of hobbyists. Thus, sealed lead gel-cell batteries were determined to be the best option. Lead-gel batteries are very rugged, relatively simple to use, and relatively inexpensive for the energy storage capacity. The only required care is to remember to recharge them if they are to be stored for extended periods of time.

The charger circuit works in constant current and constant voltage modes. The first mode is employed when the battery is fully charged, and maintains a voltage high enough to keep the battery in float mode. As shown in Figure 3, adjustable voltage reference IC1 together with feedback resistors R4 and R5, maintain the proper voltage drop across R2 to bias the base of buffer transistor Q1 to maintain the appropriate float voltage.

Diode D1 isolates the battery from the feedback resistors and the rest of the charger circuitry, otherwise the battery would discharge through them. Although this is a Schottky diode with a very small forward voltage drop, it nevertheless has a temperature coefficient which is the opposite of what the battery requires. Thus, D3 is in the feedback path to provide some temperature correction.

When the battery is being charged, the current must be limited to a safe value to avoid damage to the battery, usually a value of C/10. This limiting is simply accomplished with R3 and Q2. Whenever the voltage drop across sense resistor R3 exceeds the base-emitter voltage drop, transistor Q2 will turn on, diverting some of the bias away from Q1 until it only provides the required current. As the sense resistor is inside the feedback loop, its voltage drop is automatically compensated when the charger is operating in the voltage mode.

As shown previously, an indicator lamp lights up whenever DC power is connected to the external jack and the battery is being charged. Since the lamps are rated at 12 volts and the input voltage is higher than that, zener diode D2 is used to drop about 4.3 volts to provide a longer bulb life.

## ALARM CIRCUITRY

As previously explained, an additional safety feature is incorporated in the launcher in the form of an audible alarm. No audible alarm is more attention-gathering (read obnoxious) than the Sonalert™ devices. It is also very efficient and compact.

Thus, the only addition required is a small circuit to pulse it on and off. As shown in Figure 4, this is simply accomplished with a 555 timer IC2 operating in the astable mode at a rate of about 1 Hz. Its output drives PNP transistor Q3, which actually turns on and off the Sonalert and associated lamp.

It is important to note that the alarm circuitry is in series with the igniter. Only if the igniter is connected correctly, will the alarm and "ready" indicator lamp operate, indicating that the circuit is armed and ready to fire.

## BUILDING THE CIRCUIT

Before assembling the project, some words of advice: Safety first! It is beyond this short article to outline all the safety precautions when dealing with model rocketry.

armed rocket. The small current draw of the circuitry is not enough to fire the rocket.

Completing the controller circuit are two functions not included in the original controller: the charging circuit, also described below, and an optional meter.

## PARTS LIST

**CHARGER BOARD**
Q1: ZTX603 Darlington NPN transistor
Q2: MPS3904 NPN transistor
D1: 1N5818 Schottky diode
D2: 1N4732 Zener diode
D3: 1N5818 Schottky diode
IC1: TL431 Voltage reference
R2: 4.7K, 1/8W, 5%
R3: 2.4, 1/2W, 5%
R4: 10K, 1/8W, 1%
R5: 45.3K, 1/8W, 1%

**ALARM BOARD**
Q3: 2N3906 PNP transistor
IC2: LM555 timer
R6: 33K, 1/8W, 5%
R7: 10K, 1/8W, 5%
R8: 33K, 1/8W, 5%
C1: 0.1 uF, 50V ceramic cap
C2: 1 nF, 50V ceramic cap
C3: 0.1 uF, 50V ceramic cap

**MAIN ASSEMBLY**
J1: Input power jack
L1: 12-volt green lamp
L2: 12-volt red lamp
R1: 5 ohm, 20W, 5%
B1: 12 volt, 3 AH gel-cell battery
S1: Key switch (see text)
S2: Normally Open push switch
BZ1: Sonalert buzzer
Volt: 15 VDC voltmeter (optional)

# AMAZING MICROVIDEO!

SUPERCIRCUITS.COM
America's #1 Microvideo Source

## Buy your microvideo equipment where NASA, The Air Force, JPL, Lawrence Livermore Labs and the FBI does. Call us today.

For the best in high performance microvideo equipment, call the experts at Supercircuits. We've grown to be America's microvideo leader by consistently offering the best equipment at the lowest prices, with unbeatable service...compare our plug 'n play ease of use, warranties and return policies. Of course, Supercircuits microvideo is used by some of the biggest names in science, industry and national defense. But with prices starting at under $35 for tiny high resolution video cameras, it is truly technology that is as affordable as it is amazing. Call us today at 1-800-335-9777 for a free 80 page microvideo catalog, loaded with photos, specs and more. Or log onto our website at www.supercircuits.com. You'll be amazed!

LIPSTICK VIDEO CAMERAS
MICRO COLOR CAMERA 1" X 1" 350 TVL $89.95!!
STEALTHY SUPER PINHOLE $69.95
COLOR $189.95
1 YEAR WARRANTY
FREE CATALOG! CALL US TODAY AND GET YOURS!
WOW!
PLUG & PLAY
FREE PLUG & PLAY CABLES
1 YEAR WARRANTY
AMAZING!
STEALTHY SEE-IN-THE-DARK WEATHERPROOF WITH 56 IR LED's $139.95
$34.95
1 YEAR WARRANTY
STEALTHY PINHOLE VIDEO CAMERA $34.95 410 TVL, 0.5 LUX, 1.2"
WIRELESS VIDEO
$89.95
2.4 GHz AUDIO/VIDEO TRANSMITTER, RECEIVER W/ 700 FOOT RANGE PART 15 FCC APPROVED
.04 LUX
460 TVL
2 YEAR WARRANTY
CCTV VIDEO CAMERA $79.95!
SONY CHIPSET
NIGHTVISION VIDEO CAM
ULTRA PINHOLE VIDEO CAMERA- EASY CONCEALMENT $109.95
MINI TIME/DATE OVERLAY
MINI REALTIME B/W QUAD
TINY SIZE, 12 VDC/120
1 YEAR WARR- $149.95
WORLD'S SMALLEST! LISTED IN 1999 GUINNESS BOOK OF RECORDS
AMAZING!
MICRO VIDEO CAMERA $59.95!
1 YEAR WARRANTY
AMAZING NEW UNDERCOVER VIDEO
CAP CAM $149.95
GLASSES CAM
TIE CAM
BAG CAM
PAGER CAM
SONY GV-A500HI-8 VCR WITH 4" TFT MONITOR $979.95
WIRELESS VIDEO
WORLD'S SMALLEST VIDEO CAMERA & TRANSMITTER- 700 FOOT RANGE $299.95
1 YEAR WARRANTY
UNBEATABLE DEAL!
350 Lines of Resolution
TINY 1.25" COLOR CAMERA- PLUG & PLAY- ONLY $69.95!!

1-800-335-9777 ext NV
Or fax us at 512-260-0444
www.supercircuits.com
Free Catalog- Call Us Today And Get Yours 1-800-335-9777
www.supercircuits.com

Write in 166 on Reader Service Card.


# *Model rocketry is a fascinating hobby ...*

**PHOTO 3: THREE ... TWO ... ONE ... BLAST OFF!!**

Follow the guidelines in the Estes products.

The second issue is to test the circuit prior to launching a rocket. The easiest is to attach an igniter (without the rocket engine) and see that it will light up. Then you are ready for the real thing.

The circuit is so simple that most of the components may be assembled using point-to-point wiring. The exception is on the two small boards used for the charger and alarm circuits. Here small perf-boards may be employed.

It is important that you DO NOT connect the battery until all the circuitry has been wired and thoroughly checked. Due to its low impedance, a short-circuited gel-cell can produce extremely large currents. And when you do connect it, make sure that the key switch is in the off position.

Employ at least 24-gauge wire for all the connections from the battery to the igniter (which should be no less than 25 feet away from the launcher); the other connections may employ a lighter gauge.

Although you may use any type of cabinet for your project, I would recommend one that has a metal bottom cover. The reason is twofold: Current limiting resistor R1 can become pretty warm and to assist the heat dissipation, it may be cemented to the plate.

The second is that the gel-cell battery is relatively heavy, and must be securely attached to a surface that won't break loose.

*Have fun!* **NV**

# And the winner is ...

## 2ND PLACE

## An Electronic Flight Computer

***for use in model rocketry***

## entered by Jeff Karpinski

**JUDGES COMMENTS:** *"We found this rocket-based project intriguing. The device built by the author both collected data to monitor the rocket's flights, as well as deploy the two recovery parachutes at the appropriate points."*

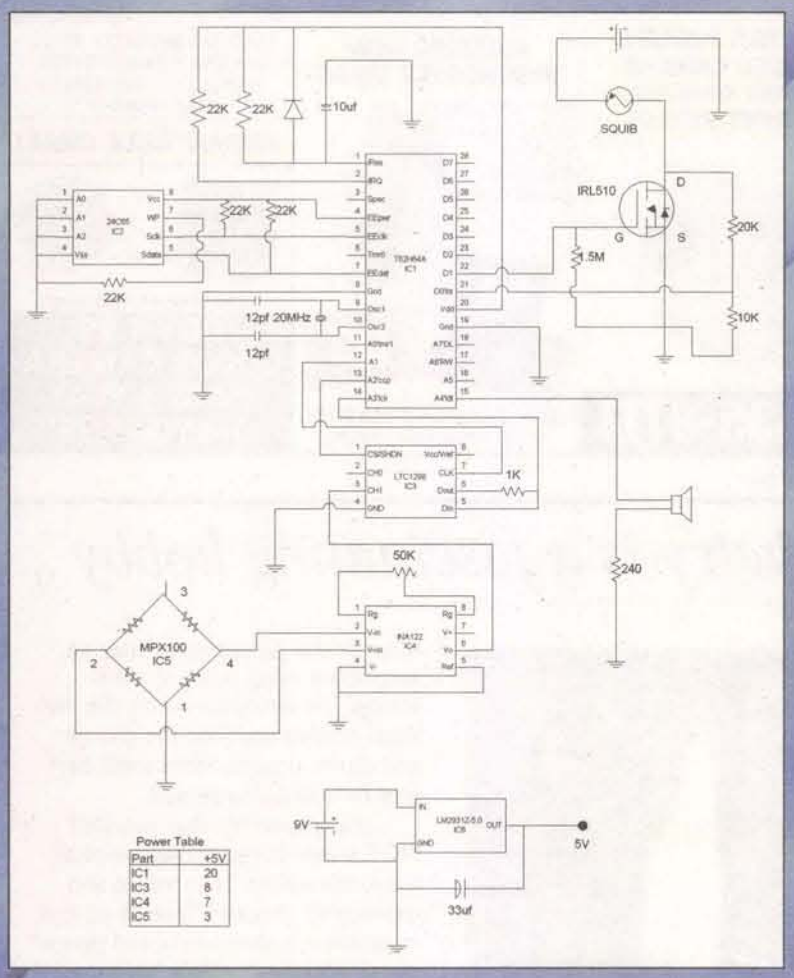

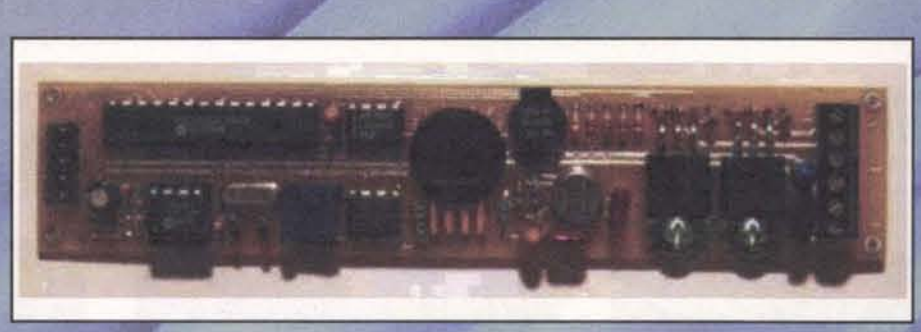

The purpose of this project was to implement a fully programmable flight computer for a large model rocket. Key features include a BASIC programmable 20MHz microcontroller from Protean Logic, barometric and acceleration sensors with 12-bit resolution, 32K of EEPROM for flight data storage, two HEXFET controlled high current events, serial and LCD interfaces, and audible feedback via piezo beeper. A 7.2V NiCd battery powers the unit. The assembled flight computer is only 1.1" by 5" in size.

During operation of the flight computer, acceleration and pressure data are captured and stored sequentially in the EEPROM. Launch is detected by reading consecutive high-G events from the accelerometer. At this point, high and low pressure values are stored, and then repeatedly compared and updated from subsequent readings. Once the current pressure is higher than the lowest pressure achieved (by approximately 50 feet), event #1 is fired. Generally, this event completes a circuit to an electric match, which ignites a black powder charge to eject a small drogue parachute. The drogue chute brings the rocket down from apogee in a rapid, but controlled descent. As the current pressure approaches the maximum pressure reading (less approximately 1,000 feet), event #2 is fired which deploys the main chute to reduce descent to under 15 fps for a safe recovery. Once event #2 fires, the flight computer begins repeatedly beeping out the difference between maximum and minimum altitude in Morse code fashion. A lookup table incorporated into the code (which is calibrated to the specific pressure sensor and the Army/Navy Equation of State) facilitates this pressure to altitude conversion. Once the rocket is retrieved, the complete flight profile of pressure and acceleration data can be downloaded to a laptop for review and additional analysis. A handheld LCD display can also be attached for in-field data review or for debugging flight code.

The included pictures show the schematic, close-ups of the completed board, assembly into the rocket nose cone (note the vent holes for obtaining accurate pressure readings), and an in-flight shot. From data captured on this launch, the 650ns "J" motor was pushing the 3.5lb rocket over 500mph at the time this picture was snapped!

**Rocket details:**

The rocket is 4'6" long, 4" in diameter, and weighs approximately five lbs. when loaded and ready for flight. It is built from fiberglass, phenolic tubing, plywood, and balsa. It is a fi scale model of the British ASRAAM, or Advanced Short Range Air to Air Missile. Originally initiated by Germany and the UK in the 1980s as a joint effort to find a replacement for the aging AIM-9 Sidewinder, Germany left the venture over design details. Britain continued with development, and the first ASRAAMs were deployed to the RAF in 1998.

This is one of my favorite rockets because the design is statically stable (most missiles are more neutrally stable for active guidance), and the large 4" diameter payload bay makes testing various electronic payloads easy. Because the rocket is fiber glassed, it can easily take the punishment that larger motors like this J450 (125 lbs. of lift) can dish out. This rocket has seen well over 50 flights in four states and has even crashed once into the Bonneville Salt Flats due to a failed shock cord.

# 3RD PLACE

# A PIC_ISA Control Board
## (sample application: a stand-alone web cam)

## entered by Dr. Edward Cheung

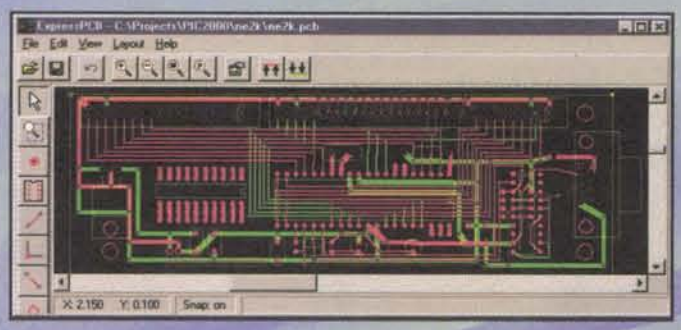


**Figure 1. Designing the PIC-ISA Control Board using Express PCB's layout software.**

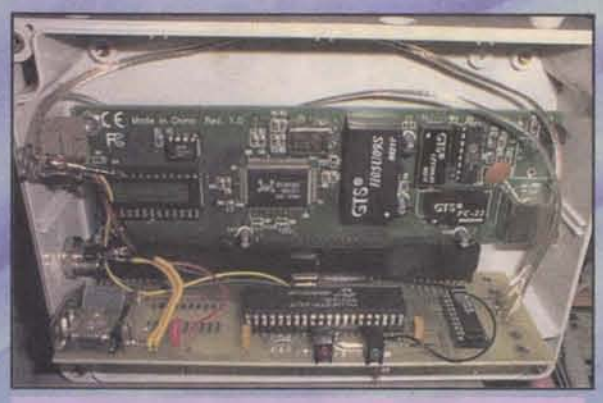

**Figure 2. The completed PIC-ISA control board (yellow). Here, an ISA ethernet card (green) has been plugged into it.**

**Figure 3. The completed Web Camera with the digital camera installed.**

**Figure 6.**

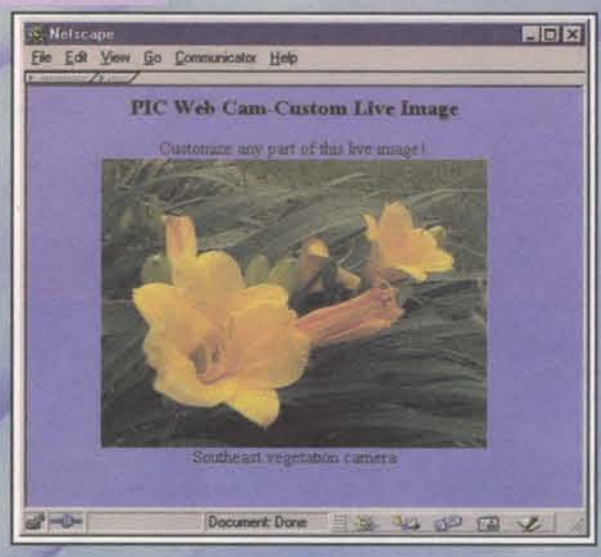


**JUDGES COMMENTS:** *"This PIC project makes use of the large assortment of I/O devices that are available for the PC. The author built a simple board that interfaces a PIC microprocessor to any standard PC ISA card. His sample application shows a PIC processor connected to an off-the-shelf ethernet card. Also, he has interfaced a digital camera. By combining all three, he has put together a stand-alone web cam using very little custom hardware."*

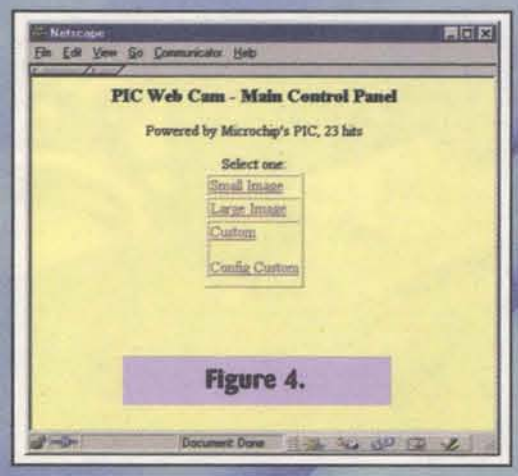


**Figure 4.**

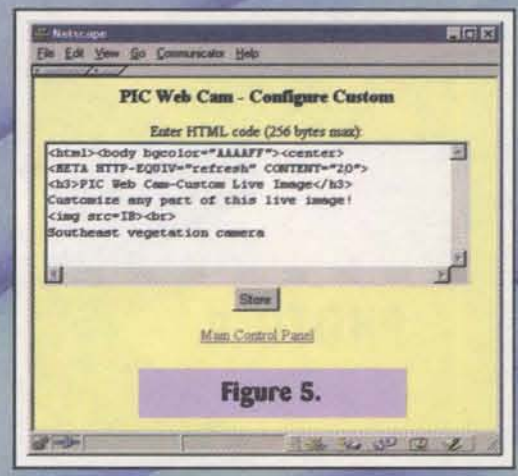


**Figure 5.**

Over the years, a huge variety of interface boards have been developed for the PC's ISA bus. Examples of these are RS-232 (serial ports), IDE (mass storage), parallel ports, ethernet boards, modems, etc. If it were possible to connect a PIC processor to these interface boards, we would have an enormous amount of choices for real-world input and control. This project describes a circuit board – known as the PIC-ISA control board – that accomplishes that. Once assembled, the PIC processor emulates the PC side of the ISA bus interface allowing it to communicate and control the ISA interface board. As an example, the control board is connected to a standard PC Ethernet card, allowing the PIC to become a full node on the local ethernet network. Software on the PIC not only turns it into a full-fledged web server but, by using a digital camera, the PIC also becomes a complete Web Camera.

The ethernet board plugs into the ISA bus connector soldered into the control board. This connects the 16 bits of the ISA data bus and five bits of the ISA address bus to three ports on the PIC. The remaining bits on the address bus are hard-wired so that the base address of the ISA board is presumed to be at 0x300. The five address lines thus allow the addressing the registers of the ISA board over the address range 0x300 to 0x320. This should be sufficient for most applications. Traces can be cut and soldered to modify the base address and range.

After the PIC Web Camera is connected to the local ethernet network via a 10BaseT (Cat 5) cable, the user can communicate with it by using 'ping' or by requesting the default home page with the URL: http://IP_ADDRESS (198.118.120.3 in this project). The resultant display on the web browser is shown in Figure 4.

Clicking on 'Small Image' will result in the small image (160x120) which is refreshed automatically every 10 seconds, and clicking on the 'Large Image' yields the large image (320x240) which is automatically reloaded every 30 seconds (see Figure 6). Lastly, clicking on 'Custom' brings up the page that is customizable by the user via the 'Config Custom' link. A form stored on the PIC is then brought up where the existing HTML code of the custom page is shown. The user can then edit and then store the code in the PIC's non-volatile memory.

On the custom page, parameters such as text, background color, image size, and refresh interval can be adjusted to the user's liking. Since the file is stored in the PIC's EEPROM, a maximum of 256 bytes can be stored. This feature allows the user to have a completely custom display for the PIC Web Camera as shown in Figure 6.

This project illustrates what is capable of a tiny PIC processor, doing the work of a much larger desktop computer and serving up digital images from a still camera. Other projects that are just as amazing are possible by starting with a different type of ISA board plugged into the Express PCB control board.

*Be sure and check out next month's issue when the Honorable Mentions will be featured.*

## Honorable Mentions

"100 Watt Power Amplifier"
entered by Robert E. Friess

"ClipClop"
entered by
David E. Smith

"WindReader"™
entered by Victor Fraenckel

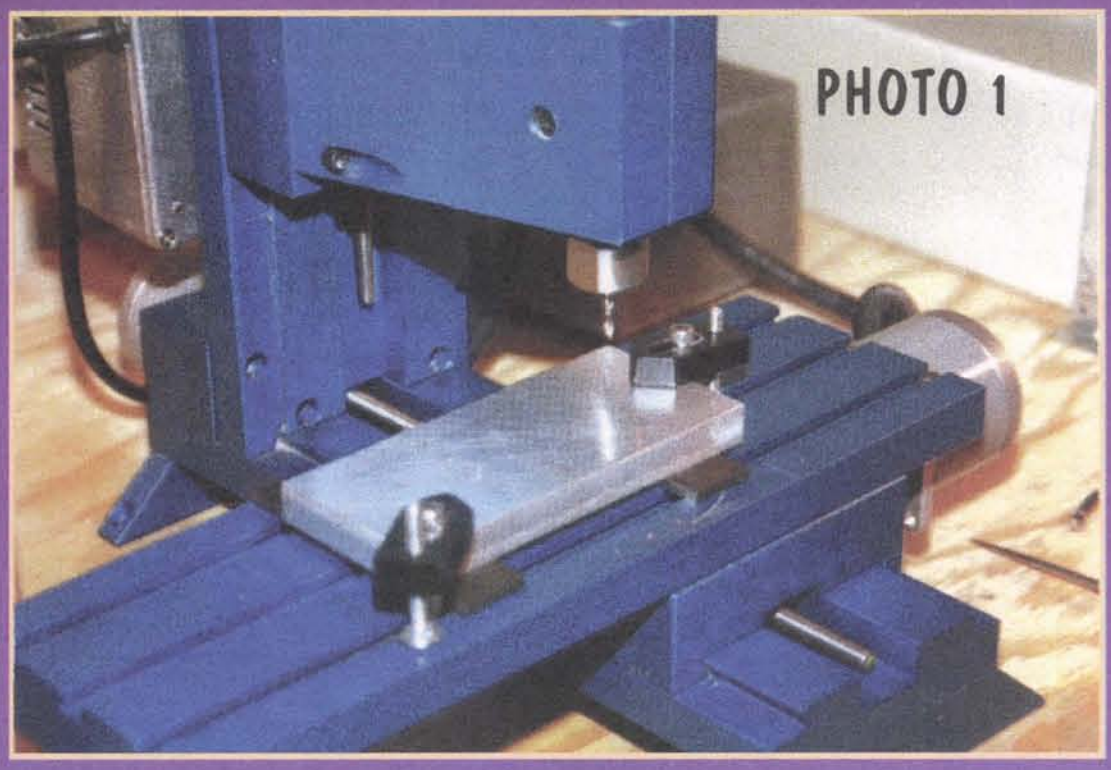


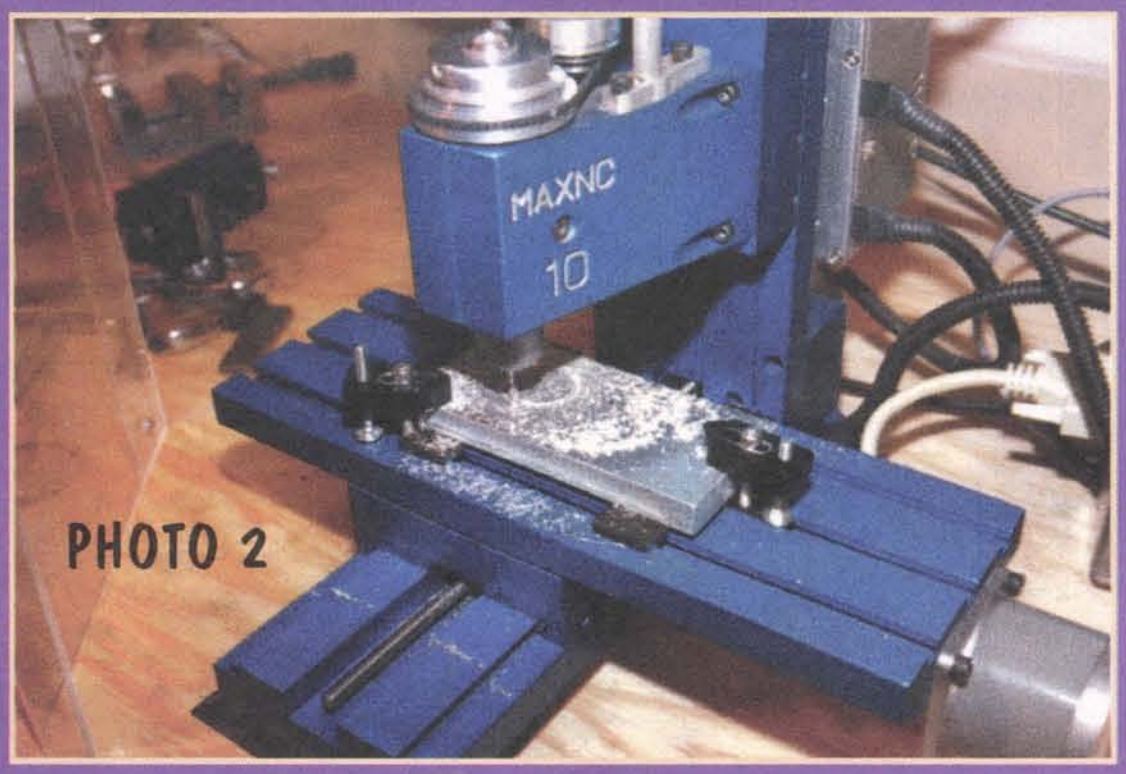


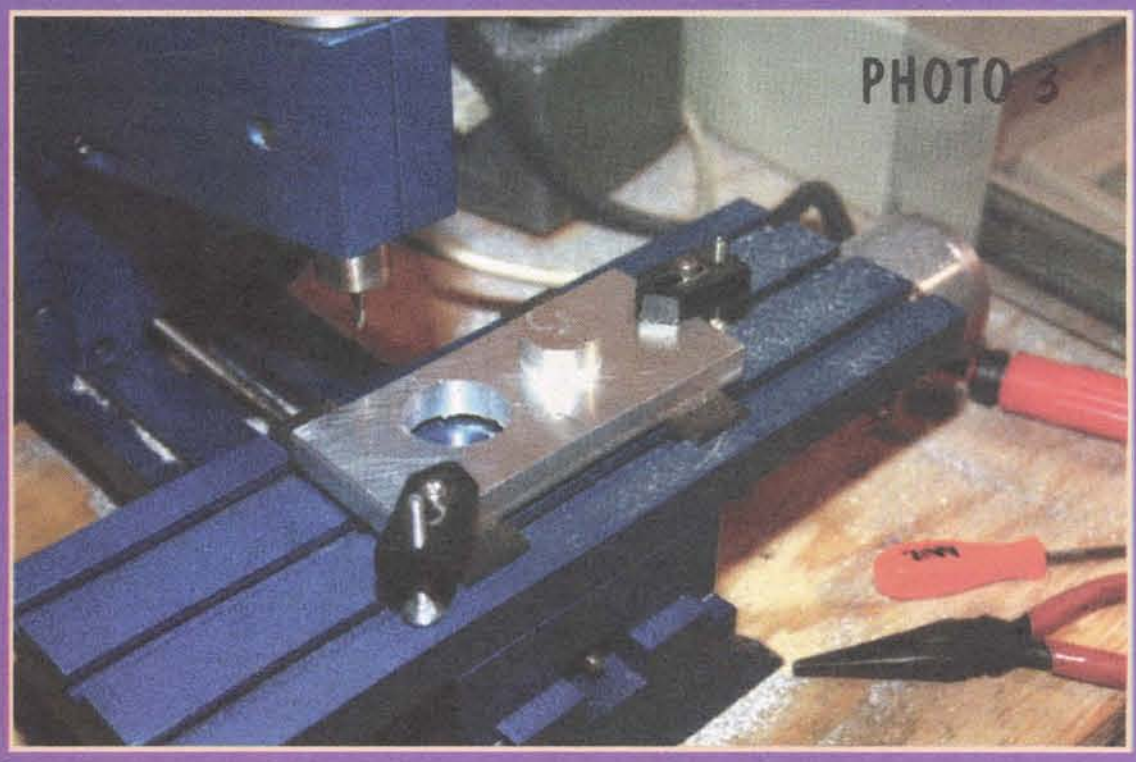


by Matthew Evans

# Using Basic to Generate G-code

**Several recent articles in *Nuts & Volts* have given readers instructions on how to build a computer numerically controlled (CNC) milling machine. An industry standard method used to control the milling machine after it's built is to create a G-code file that can be interpreted by the milling machine's computer. A G-code file is comprised of instructions that describe the path the cutting tool will take.**

There are many different methods of creating this G-code file. If you have a CAD program which can export a DXF file, there are programs which will convert the DXF file into G-code. If all you have is an idea in your head or a sketch on the back of a napkin, this article will help. It will explore using the Basic programming language to generate the G-code file.

You could write G-code with a text editor. However, on small, low horsepower CNC machines like a converted Sherline (www.sherline.com), a MAXNC10 (www.maxnc.com), or perhaps one you built yourself from following the *Nuts & Volts* articles, the allowable incremental increase in the amount of material removed per cut is small. You cannot make a .050 x .500 cut with a 1/10 HP milling machine.

Writing G-code with a text editor to remove a relatively large amount of material with a small machine is painfully time consuming. As an example, I milled out a 1.657 diameter by .400 deep bearing pocket (see Figure 1) from some half inch 6061-T6 aluminum with the MAXNC10. Using a radial increase of .020", and a depth increase of .020", the resulting G-code file was over 200 lines created by cutting and pasting the repetitive parts and then editing the lines which control the depth one by one. This task took hours.

There is an advantage when using a small milling cutter: to make two cuts, one just inside the other, so that the amount of material removed on the second or finish cut is small. Now entering the G-code manually takes twice as long!

Instead, it is easy to create a Basic program

to write a text file that can be read by a G-code interpreter. A G-code interpreter is a program that converts G-code statements into movement commands for the steppers driving the axis on the milling machine. In my case, the G-code interpreter was included in the MAXNC10 package. (See elsewhere in the article for a table of G-codes supported by the MAXNC10 interpreter.)

Qbasic is a Microsoft product that came with DOS and is still probably somewhere on your computer unless you specifically deleted it. It is on the Windows 98 CD (in the directory 'tools\oldms-dos\', the two files 'qbasic.exe' and 'qbasic.hlp'), on the Windows 95 CD (in the directory 'other\oldmsdos\'), or on the MS-DOS 5 or 6.x disks. So, if you own MS-DOS (version 5 or higher) or Windows 9x, QBasic is completely free for you. Even the older GWbasic can create the text files described here.

These small milling machines do not require a lot of computing horsepower; mine runs in a Windoze95 DOS window on an 80486-DX2/100. It could run on a system with just DOS, but I like the text editor in WIN95.

The large hole in the plate of Figure 1 is a pocket for a 1.655 diameter bearing for the main shaft of a small hand operated plunger type injection molding machine that I am converting to motor drive. The 1.657 pocket is .400 deep. A 1.250 hole goes through the remainder of the material. In this case, the center portion can be removed as a plug for the first cut. Using a .125 end mill, a sample G-code statement would be:

G03 X –3.420 Y - .430 I0 J -. 563

Using the upper left corner of the plate in Figure 2, this line of G-code creates a small circular groove .125 wide with an outside diameter of 1.251 (.563 + .563 + .125 = 1.251). The G-code statements describe the path that the center of the milling cutter takes, not the finished edges. The G03 header indicates that this will be a clockwise circular arc.

On the MAXNC10 G-code interpreter, G03 can be either an arc or a complete circle. Other G-code interpreters may use different codes for arcs and complete circles. The X and Y values are the start location of the cut. Remember that the values are for the center of the tool. The I value is the distance from the start position of the end mill to the center of the diameter being cut along the X direction. In this case, that distance is 0. The J value is the distance from the start position of the diameter being cut along the Y direction. In this case, it is .563. The negative signs indicate that this cut is below and to the right of the origin. Photo 1 shows the plate mounted on the MAXNC10 before the first cut with the end mill at the origin.

There are several advantages to cutting a smaller diameter right inside the 1.251 one (see Figure 3). First, most of the material is removed on the first cut, which makes a .125 x .020 groove; this leaves only a .020 x .020 increase on one side for the second cut. This small second cut will leave a better finish on the final diameter.

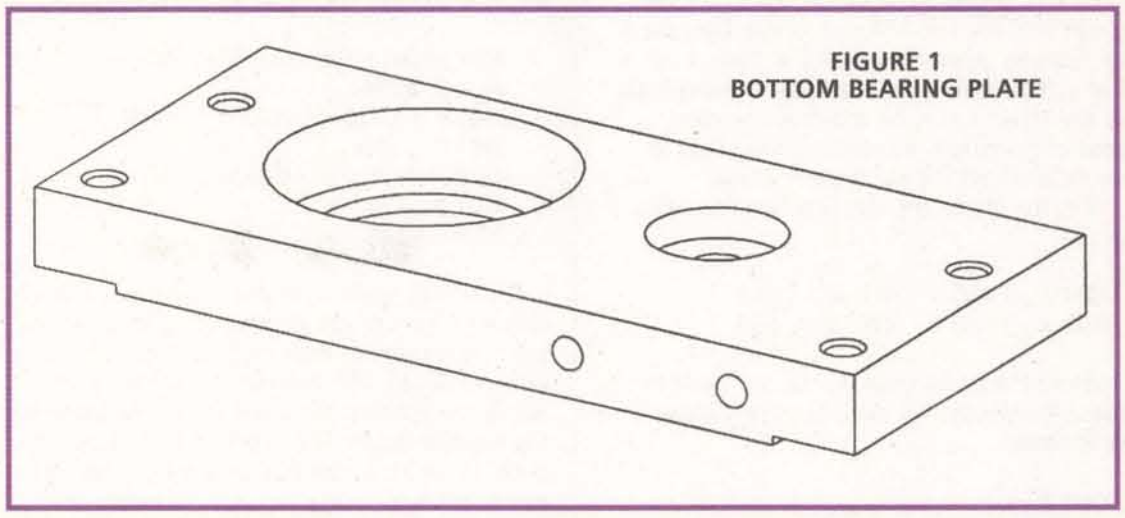

**FIGURE 1**
**BOTTOM BEARING PLATE**

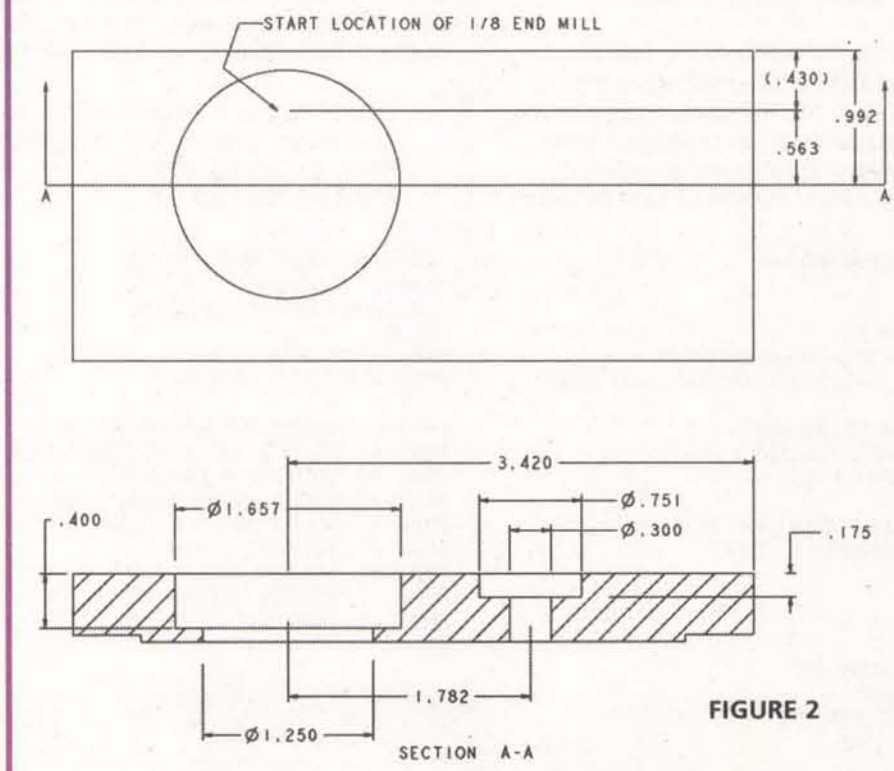


**FIGURE 2**


**Do You Repair Electronics?**

*For only $7.95 a month, you'll receive a wealth of information:*

*Repair data for TV, VCR, monitor, audio, camcorder, & more.*

**Over 100,000 constantly updated problem/solutions plus...**

- TechsChat live chat room.
- Private user discussion forums.
- Automated email list server.
- UL/FCC number lookup.
- Hot tips bulletin board.
- Manufacturer information.

*To access RepairWorld, direct your internet browser to http://www.repairworld.com*

**RepairWorld.com**

Electronix Corp. 1 Herald Sq. Fairborn, OH 45324 (937) 878-9878

Write in 117 on Reader Service Card.

**SATELLITE TV – HACKERS 'BIBLE'!**

**The SECRETS are REVEALED!**

- The principles of security
- Descrambler building blocks
- Smart cards, information wars & stupid mistakes
- Cracking codes (includes DirecTv source code)
- Installing and hooking up descramblers
- Video manipulative systems...and much more...

**www.baylin.com**
**or... call 800-483-2423**

576 pages, 6" x 8-1/2"

NEW!
5th Edition

**ORDER via Internet or Send $60 plus $5 s/h to:**
Baylin Publications, 1905 Mariposa, Boulder, CO 80302
**MASTER,VISA & AMEX /COD orders accepted**

*Telephone: 303-449-4551*
*FAX: 303-939-8720*

**FREE CATALOG – Satellite TV books, videos and software**

Write in 115 on Reader Service Card.

Other advantages are that the cut is wider than the end mill, giving some of the chips an easier way out, and the end mill runs cooler because it is not rubbing against two sides at once. I use a can of compressed air with a tube to periodically blow the chips out. If the material was steel instead of aluminum, I'd use a cutting fluid to lubricate and cool the cutter as it works.

With the inside cut, the first two lines are now:

```
G03 X –3.420 Y -. 410 I0 J -. 543
G03 X –3.420 Y -. 430 I0 J -. 563
```

Before the groove can be cut, we need to increase the depth and then increase it again after each cut.

```
G01 Z -. 02
G03 X –3.420 Y -. 410 I0 J -. 543
G03 X –3.420 Y -. 430 I0 J -. 563
```

The Z value is the depth of the first cut. This is the value that will be incremented as the cut gets deeper. This cut is .500 deep, therefore you could cut and paste these three lines 25 times (.500 total depth/.020 incremental depth) or imagine writing a short FOR-NEXT loop program that increments the depth for you and writes the file. The concept for this program is below

```
FOR depth = 0 to .500 STEP .02
G01 Z depth
G03 X –3.420 Y -. 410 I0 J -. 543
G01 Y -. 390
G03 X –3.420 Y -. 430 I0 J -. 563
G01 Y -.410
NEXT depth
```

The FOR statement sets the initial and final values of the variable depth. The STEP value tells the FOR statement how much to increment the value of depth. The G-codes are the same as above, except that the value for Z is replaced by the variable depth. The NEXT line tells the computer to return to the FOR statement. The FOR statement increments the value of depth and then checks to see if that value is greater than the final value and either allows the loop to continue or terminates when the final depth is reached. Real Qbasic code looks like this,

```
OPEN "1stgruv.txt" FOR OUTPUT AS #1
REM move cutter to X=0, Y=0, Z=.050
PRINT #1 "G00 Z .050"
PRINT #1 "G00 X0 Y0"
REM move cutter to start position
PRINT#1 "G01 X –3.420 Y -.410"
FOR depth = .02 to .500 STEP .02
PRINT #1, "G01 Z -";
PRINT #1, USING "#.###"; depth
PRINT #1, "G03 X –3.420 Y -.410 I0 J -.543"
PRINT #1, "G01 Y -.390"
PRINT #1, "G03 X –3.420 Y -.430 I0 J -.563"
PRINT #1, "G01 Y-.410
NEXT depth
CLOSE
END
```

The OPEN statement opens a new file named "1stgruv.txt" in the current directory. The filename must be in DOS readable (i.e., 8.3) for the G-code interpreter that drives the MAXNC10. The REM statement is for a REMark; you can add anything after it and Qbasic will ignore it. The PRINT statement adds lines to the open file.

The first two PRINT statements move the tool to a known position from wherever it might be when the program starts. Note the space after the Z and the semicolon after the last quotation mark in the fourth PRINT statement. This formats the line properly and allows the following PRINT statement to be appended to the same line.

The USING statement formats the variable

Here is the listing of gcg.bas

```
CLS
REM gcg.bas ver 1.0
REM released as freeware to the public
REM domain in conjunction with "Nuts and Volts"
REM article.
REM last update on 25-jul-00
INPUT "FILENAME"; FILENAME$
FILENAME$ = FILENAME$ + ".TXT"
NUMLINE = 0
OPEN FILENAME$ FOR OUTPUT AS #1
PRINT #1, "(; FILENAME$; ")"
CLOSE

MENU:
PRINT "0 QUIT"
PRINT "1 CUT DIAMETER"
PRINT "2 whatever"
INPUT "CHOOSE"; FEATURE
IF FEATURE = 1 THEN
  GOSUB HOLE
  GOTO MENU
ELSEIF FEATURE = 2 THEN
  PRINT "SORRY CHARLIE"
  GOTO MENU

ELSEIF FEATURE = 0 THEN
  OPEN FILENAME$ FOR APPEND AS #1
  PRINT #1, "G01 Z .1"
  PRINT #1, "G01 X0 Y0"
  PRINT #1, "M5"
  PRINT #1, "M30"
  CLOSE
  END
END IF

HOLE:
INPUT "CENTER OF HOLE X,Y "; X, Y
INPUT "START DIAMETER "; SDIA
INPUT "END DIAMETER "; EDIA
INPUT "START DEPTH "; SDEPTH
INPUT "FINISH DEPTH "; DEPTH
INPUT "RADIAL INCREMENT "; RI
INPUT "DEPTH INCREMENT "; DI
INPUT "MILL DIAMETER "; MD

REM SET INITIAL CUTDIA
IF SDIA = 0 THEN
  CUTDIA = MD + RI
  DIA$ = " INSIDE "
  LASTDIA = EDIA - MD / 2
ELSEIF SDIA > 0 AND SDIA < EDIA THEN
  CUTDIA = SDIA
  DIA$ = " INSIDE "
  LASTDIA = EDIA - MD / 2
ELSEIF SDIA > EDIA THEN
  RI = -RI
  CUTDIA = SDIA + MD + RI * 2
  DIA$ = " OUTSIDE "
  LASTDIA = EDIA + MD / 2
END IF
PRINT "CUTDIA "; CUTDIA
PRINT "LASTDIA "; LASTDIA

OPEN FILENAME$ FOR APPEND AS #1
PRINT #1, "(THIS IS AN "; DIA$; " DIAMETER"
PRINT #1, "(CENTER OF DIAMETER X,Y "; X; " "; Y; ")"
PRINT #1, "(CUTTING DIAMETER "; SDIA; ")"
PRINT #1, "(END DIAMETER "; EDIA; ")"
PRINT #1, "(DEPTH "; DEPTH; ")"
PRINT #1, "(RADIAL INCREMENT "; RI; ")"
PRINT #1, "(DEPTH INCREMENT"; DI; ")"
PRINT #1, "(MILL DIAMETER "; MD; ")"
CLOSE

REM SET INITIAL CUT DEPTH
CUTDEPTH = SDEPTH + DI


REM MOVE TO INITIAL START LOCATION
OPEN FILENAME$ FOR APPEND AS #1
PRINT #1, "G01 Z .05"
PRINT #1, "G01 X"; X; " Y "; CUTDIA / 2 + Y
PRINT #1, "M3"
IF SDEPTH > 0 THEN PRINT #1, "G01 Z -"; SDEPTH
CLOSE

DEPTH:
IF CUTDEPTH < DEPTH THEN
  REM WRITE A LINE TO FILE
  OPEN FILENAME$ FOR APPEND AS #1
  PRINT #1, "G01 Z ";
  PRINT #1, USING "#.###"; -CUTDEPTH
  CLOSE
  GOSUB DIAMETERCUT
  REM INCREMENT CUTDEPTH
  CUTDEPTH = CUTDEPTH + DI
ELSEIF CUTDEPTH > DEPTH OR CUTDEPTH = DEPTH
THEN
  CUTDEPTH = DEPTH
  REM WRITE A LINE TO FILE
  OPEN FILENAME$ FOR APPEND AS #1
  PRINT #1, "G01 Z ";
  PRINT #1, USING "#.###"; -CUTDEPTH
  CLOSE
  GOSUB DIAMETERCUT
  GOTO MENU
END IF
GOTO DEPTH

DIAMETERCUT:
 IF SDIA < EDIA THEN
  IF CUTDIA < LASTDIA THEN
    CUTRADIUS = CUTDIA / 2
    GOSUB CUTME
  ELSEIF CUTDIA > LASTDIA OR CUTDIA = LASTDIA
THEN
    CUTDIA = LASTDIA
    CUTRADIUS = CUTDIA / 2
    GOSUB CUTME
    REM RETURN TO START DIAMETER SDIA
    REM RESET CUTDIA
    IF SDIA = 0 THEN
      CUTDIA = MD + RI
      ELSE
      CUTDIA = SDIA
      END IF
      OPEN FILENAME$ FOR APPEND AS #1
      PRINT #1, "G01 Y ";
      PRINT #1, USING "#.###"; CUTDIA / 2 + Y
      CLOSE
      RETURN
    END IF
  ELSE
   IF CUTDIA > LASTDIA THEN
    CUTRADIUS = CUTDIA / 2
    GOSUB CUTME

  ELSEIF CUTDIA < LASTDIA OR CUTDIA = LASTDIA
THEN
    CUTDIA = LASTDIA
    CUTRADIUS = CUTDIA / 2
    GOSUB CUTME
    REM RETURN TO START DIAMETER SDIA
    CUTDIA = SDIA + MD + RI * 2
    OPEN FILENAME$ FOR APPEND AS #1
    PRINT #1, "G01 Y ";
    PRINT #1, USING "#.###"; CUTDIA / 2 + Y
    CLOSE
    RETURN
  END IF
  END IF

REM INCREMENT CUTDIA
CUTDIA = CUTDIA + 2 * RI
GOTO DIAMETERCUT

CUTME:

REM WRITE A LINE TO FILE
OPEN FILENAME$ FOR APPEND AS #1
PRINT #1, "G01 Y ";
PRINT #1, USING "#.###"; CUTDIA / 2 + Y
PRINT #1, "G03 X"; X; " Y ";
PRINT #1, USING "#.###"; CUTDIA / 2 + Y;
PRINT #1, " I 0 J ";
PRINT #1, USING "##.###"; -CUTRADIUS
CLOSE
RETURN

REM Program written by Matthew Evans
REM klmevans@warwick.net
```

depth to X.XXX. If the value is not formatted before printing, the computer might add some insignificant digits that might confuse the interpreter. Qbasic interprets each line as you type it, and will question typing errors and alert you to most programming errors.

Here are the first 15 lines of the code created by the above program:

```
G00 Z .050
G00 X0 Y0
G01 X -3.420 Y -.410
G01 Z -0.020
G03 X -3.420 Y -.410 I0 J -.543
G01 Y -.430
G03 X -3.420 Y -.430 I0 J -.563
G01 Z -0.040
G03 X -3.420 Y -.410 I0 J -.543
G01 Y -.430
G03 X -3.420 Y -.430 I0 J -.563
G01 Z -0.060
G03 X -3.420 Y -.410 I0 J -.543
G01 Y -.430
G03 X -3.420 Y -.430 I0 J -.563
```

Photo 2 shows the MAXNC10 running this code.

Notice how several print statements are used

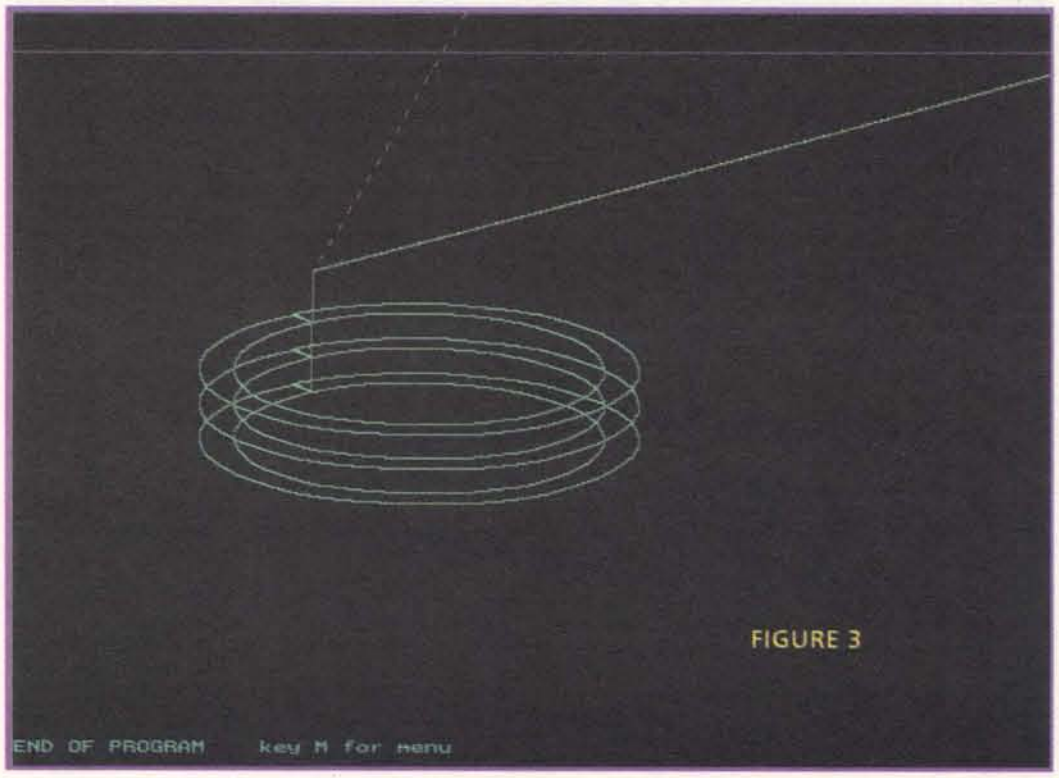

## REFILL INKS FOR INKJET PRINTERS

*Refill your old cartridge and save. All refill kits come with instructions and needed materials for refilling inkjet cartridges. Success guaranteed. Available for the following:*

**CANON BC-01**, BC-02 CANON BJ10e, APPLE STYLEWRITER, BJ-200 Single, Black, $8.00. **CANON BJC-600** (BC-201) 9 refills Black $19.00 3 refills each color $24.00. **CANON BJC-6000** (BCI-3B) 5 refills black $19.00 3 refills each color (BCI-3C, 3M, 3Y) $24.00. **CANON BJ-130/300/330 & IBM Exec Jet** (Cart #BJI-481 & BJI-642) Black - 3-bottle kit $22.00. **CANON BJC-210/240** (BC-05 Cart) 3-color kit (3 refills each color for BC-05) $24.00. **CANON BJC-4000** and Apple Stylewriter 2400 Black 3-bottle kit (3 refills BC-20, 9 refills BCI-21 black, 30 refills BCI-11 black, 10 refills BCI-10) $19.00. **CANON BJC-4000/BJC70** and **Apple Stylewriter 2400** Tri-color kit - 6 refills each color for BCI-21 or 15 refills each color for BCI-11 $24.00. **CANON BJC-800/820/880** 3-bottle kit (for BJI-643B) $19.00. **CANON BJC-800/820/880** 3-bottle tri-color kit (Cart #BJI-643CMY) $24.00. **EPSON STYLUS COLOR PRINTER** - (Cart S020034) Single Triple black $19.00; Tri-color kit (Cart S020036) 2 refills each color $24.00. **EPSON STYLUS COLOR II** - (S020047) Triple Black $19.00 (S020049). Tri-color (2 refills each color) $24.00. **EPSON STYLUS COLOR 400, 500, & 600** (S020093) Triple black (7 refills total) $19.00. **EPSON STYLUS COLOR 200, 500** (S020097) Tri-color 3 refills each color $24.00. **EPSON STYLUS COLOR 400, 600, 800, 1520** Tri-color (S020089) 3 refills each color $24.00. **EPSON STYLUS 800/1000** (S020025) 3-refill kit, black, $19.00. **EPSON STYLUS COLOR 440 AND 640** Black refill kit. (S020187) 4 refills plus free vacuum bottle $19.00. **EPSON STYLUS COLOR 440, 640, AND 740** (S020191) Color refill kit. 4 refills of each color $24.00. **HP DESKJET 500/550/560** (51608A, 51633A, 51626A) Black single refills $8.00. **HP DESKJET 500/550/560.** Black 3-bottle kit $19.00. **HP DESKJET 500C/550C/560C .** Tri-color kit (5 refills each color) $24.00. **HP DESKJET 1200C, DESIGNJET 650** (Cart #HP 51640B) Black Three pack (3 refills) $19.00. **HP DESKJET 1200C/1600C, DESIGNJET 650** (Cart #HP 51640 C,M,Y). Tri-color kit (one refill each color) $24.00. **HP DESKJET 600/660** (HP 51629A) Black three pack $19.00. **HP DESKJET 600C/660C.** (HP 51649A) Tri-color (5 refills each color) $24.00. **HP DESKJET 855C/1600C** (HP 51645A) Black three pack $19.00. **HP DESKJET 855C** (HP 51641A) Tri-color kit (2 refills each color) $24.00. **HP PAINTJET** and **PAINTJET XL** (51606A) Black 3-bottle kit $19.00. **HP PAINTJET** and **PAINTJET XL** (51606C) Tri-color kit $24.00. **HP PAINTJET XL300** (C1645A & C1656A) Black 3-refill kit $19.00. **HP PAINTJET XL300** Tri-color kit (1 refill each color) HP 51639C,M,Y $24.00. **HP THINKJET, QUIETJET, KODAK DICONIX 150** (51604A or 92261A) black 5 refills $9.00. **IBM/Lexmark/Execjet/4076** (1380620) black 3-refill kit $19.00. **IBM/Lexmark ExecJet IIC, WinWriter 150 C** (Cart #1380619) 4 refills each color $24.00. **Lexmark 3200, 5000, 5700, 7000, 7200, Optra 45 and Z51** (12A1970) 3 refills Black $19.00. **Lexmark 3200, 6000, 5700, 7000, Optra 45 and Z51** (12A1980) 4 refills each color $24.00. **SNAP AND FILL SYSTEM** - Permits refilling HP 51626A (black for HP 500-series) and HP 51629A (black for HP 600-series) cartridges without making a hole in the cartridge. Consists of special cartridge holder, syringe, plastic tubing, and directions. **STARTER KIT** - with ink for 3 refills $28.00. **EXTRA INK FOR SNAP & FILL SYSTEM** (black only) 4-oz. bottle $18.00; 8-oz. bottle $34.00. Specify whether for HP 51626A or HP 51629A.

## HARD-TO-GET PRINTER RIBBONS

Gorilla Banana, Commodore 1525 **$8.00**; Adam Coleco **$12.00**; TI-850/855 **$6.00**; Centronics 700 Zip Pack **$5.00**; C. Itoh Prowriter Jr., Riteman C+/F+ **$6.00**; Riteman Inforunner **$8.00**; Commodore MPS-801 **$5.00**; MPS 803 **$5.00**; Decwriter LA30/36 **$4.00**; Apple Scribe **$4.00**; Mannisman Tally Spirit 80, Commodore 1526 **$5.00**; Epson JX-80 4-Color **$14.00**. Printronix P-1013 **$11.00**; Star SJ144 color 3-pack **$29.00**.
ALSO HEAT & TRANSFER RIBBONS AND PAPER FOR PRINTING T-SHIRTS.

*Over 300 different ribbons in stock. All ribbons new, not re-inked. Fully guaranteed. Order directly or send SASE for complete list.*

Add $4 per order shipping. CA residents add 7.75% sales tax. On ribbon orders over $50 deduct 10%.

**H.T. ORR Computer Supplies**
249 Juanita Way, Placentia, CA 92870-2216
**714-528-9822 · 800-377-2023 · FAX 714-993-6216**
**e-mail: Htorr@aol.com**
**http://www.extremeplay.com/occomp/orr.htm**

Write in 114 on Reader Service Card.

## LOWEST COST LCD'S ON EARTH

### VIDEO LCD

4 Inch Video NTSC $150
Sharp P/N 4LU4E
Composite NTSC & RGB Input
12:00 OR 6:00 Viewing Angle
Integrated Backlight & Inverter
Extended Temp: -10 to + 60 C
Brightness: 260 nits
Power Consumption: 4.3 Watts
Contrast: 50 to 1

### CHARACTER LCD

OPTREX DMF-5005SN-EW
240 x 64 Graphic EL Backlit STN $30
OPTREX DMF-5005N
240 x 64 Graphic Reflective STN $30
SANYO DM2023-7G1
2 x 20 Character Reflective STN $8
SHARP LM20A21
2 x 20 Character Reflective STN $8
VIKAY 2035TNLD NOTW-D
2 X 16 Character LED Backlit STN $8

### LCD MONITOR

10.4" DSTN or 12.1" TFT
Analog SVGA Input
Autosync
Auto Sizeing
Automatic Expansion of VGA images to SVGA (On 12.1")
Very Aggressive Pricing Starting under $500!

### TOUCH MONITOR

**EarthVue 10.4**
10.4" VGA TFT
Analog VGA Input
105 Nit Brightness
RS-232 Touch Screen Option
Only 9.9"W x 7.7"H x 1.5"D
Ideal For Factory Automation
Fully Articulating Ball Mount
Only $1095 With Touch

### LCD DISPLAYS

| | |
|---|---|
| 6.3" Mono STN | $60 |
| 9.4" Mono Reflective | $60 |
| 8.4" TFT | $250 |
| 9.4" DSTN | $150 |
| 10.4" TFT | $350 |
| 10.4" DSTN | $240 |

**NoteBook Screens**
**340 Models in Stock**
**Obsolete Screens Stocked**
**Hard To Find LCD? Call!**

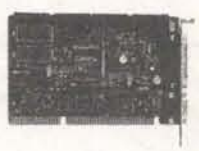

### CONTROLLERS

ISA
PCI
PC/104
NTSC
Analog VGA
Complete LCD Kits with LCD, Controller & Cable Starting under $200

**EARTH**
Computer Technologies
***"The World Leader In LCD Recycling"***

**Ph: (949) 361-2333 Fax: (949) 361-2121**
**http://www.flat-panel.com**

Write in 119 on Reader Service Card.

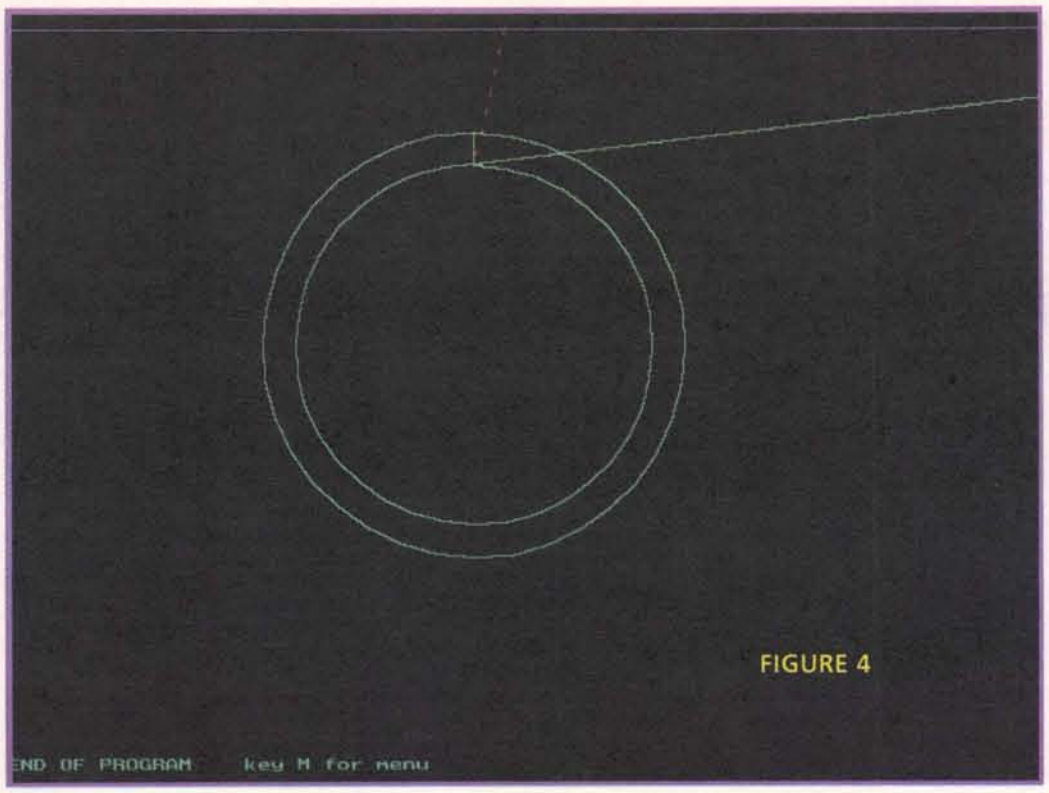


FIGURE 4

to assemble a single line of G-code. There are always three or four viable ways of getting a Qbasic program to do something. This method is easy to debug because the Qbasic interpreter runs the program line by line and stops at any error. The more Qbasic lines you have to describe a G-code instruction, the easier it is to debug your program.

It is nice to run the file output by this code (1stgruv.txt) on a graphical interpreter before trusting it to your mill. The MAXNC10 came with a graphical interpreter that reads the file and plots it on the screen instead of driving the steppers. The output from the graphical interpreter from 1stgruv.txt is too close together to see any detail, so to create a better picture, let's change the STEP (depth) value to .100 and decrease the final depth to .300. The second circular cut will also increment by .100 each time. This would make the final diameter of the circle .663 x 2 = 1.326.

```
OPEN "T3.txt" FOR OUTPUT AS #1
REM move cutter to X=0, Y=0, Z=.050
PRINT #1 "G00 Z .050"
PRINT #1 "G00 X0 Y0"
REM move cutter to start position
PRINT#1 "G01 X –3.420 Y -.410"
FOR depth = .100 to .300 STEP .100
PRINT #1, "G01 Z -";
PRINT #1, USING "#.###"; depth
PRINT #1, "G03 X –3.420 Y -.410 I0 J -.543"
PRINT #1, "G01 Y -.310"
PRINT #1, "G03 X –3.420 Y -.530 I0 J -.643"
PRINT #1, "G01 Y-.410
NEXT depth
CLOSE
END
```

Here is the output from this figure friendly program.

```
G00 Z .050
G00 X0 Y0
G01 X -3.420 Y -.410
G01 Z -0.100
G03 X -3.420 Y -.410 I0 J -.543
G01 Y -.310
G03 X -3.420 Y -.430 I0 J -.643
G01 Y -.410
G01 Z -0.200
G03 X -3.420 Y -.410 I0 J -.543
G01 Y -.310
G03 X -3.420 Y -.430 I0 J -.643
G01 Y -.410
G01 Z -0.300
G03 X -3.420 Y -.410 I0 J -.543
G01 Y -.310
G03 X -3.420 Y -.430 I0 J -.643
G01 Y -.410
```

See Figure 3 for the screen capture of the above G-code. In this figure, the magenta line near the top is the X axis. As this is a zoomed in view, the Y axis is not visible. You can see the different values of the variable depth as it increments. Figure 4 is the plane or top view, showing the output as it appears on the X-Y plane of the milling machine table. You can clearly see that one tool path is nested inside the other.

If you start this cut at the top surface of the part, the last cut will break through the bottom surface, probably breaking the end mill and flinging the plug across the garage. You might also cut into the mill's working surface. If you set your Z=0 to be .005 or .010 above the top surface, there will be a thin web left and you could push the plug out with your fingers after the program ends. You could also run the program from 0 to .495 and achieve the same thing.

Clamping a piece of thin waste material under the part is another good method if you remember to zero the Z-axis before running. In a pinch, several pieces of paper can be used; a piece of generic copier paper is about .004" thick. See Photo 3 for the finished cut (from 1stgruv.txt, not the picture-friendly T3.txt!) with the plug removed.

Different milling machines will have different rates of removing material, determined by the power of the motor and other factors. You'll have to experiment with motor speeds and tool feed rates on your machine.

On the MAXNC10, I am comfortable with a .040 x .040 cut with a .250" end mill in aluminum alloy 6061-T6 at the highest motor speed and approximate feed rate of four inches per minute.

On a more sophisticated CNC machine, you

EPROM+

A device programming system for design, repair and field service

◆ EXCEPTIONAL POWER FOR THE PRO
◆ EASY-TO-USE FOR THE NOVICE

*Here's what you get:* A rugged, portable programming unit including the power pack and printer port cable both of which store inside the case. A real printed user and technical manual which includes schematic diagrams for the programming unit plus diagrams for all technology family adapters*. Comprehensive, easy-to-use software which is specifically designed to run under DOS, Windows 3.1, 95 and 98 on any speed machine. The software has features which let you **READ**, **PROGRAM**, **COPY** and **COMPARE** plus much more. You have full access to your system's disk including **LOADING** and **SAVING** chip data plus automatic processing of **INTEL HEX**, **MOTOROLA S-RECORD** and **BINARY** files. For detailed work the system software provides a full screen buffer editor including a comprehensive bit and byte tool kit with more than 20 functions.

*Broad device support:* Including **FIRST GENERATION EPROMS** (2708, TMS2716*, 25XX etc.) **SECOND GENERATION EPROMS** (2716-27C080)(8 MEG), **40 and 42 PIN EPROMS*** (27C1024-27C160)(16 MEG) **EEPROMS** (2816-28C010) PLUS **ER5901**, **FLASH EPROMS** (28F,29C,29EE,29F)(32 MEG), **NVRAMS** (12,20,X2210/12) **8 PIN SERIAL EEPROMS*** (24 ,25 ,85, 93, 95, 80011A) PLUS **ER1400/M58657*** **BIPOLAR PROMS*** (74S/82S), **SERIAL FPGA CONFIGURATORS** (17CXXX) **MICROS*** (874X,875X,87C5X,87C75X,89C) **ATMEL MICROS*** (89S,90S)(AVR) **PIC MICROS*** 8, 18, 28, 40 PIN (12CXXX,16C5X,6X,7X,8X PLUS FLASH & 17C) **MOTOROLA MICROS*** (68705P3/U3/R3, 68HC705C8/C9/J2/P9, 68HC711E9/D3)

$289

☐ Includes step-by-step tutorial plus explanation of EPROM fundamentals
☐ 1 YEAR WARRANTY - 30 DAY MONEY BACK GUARANTEE
*REQUIRES SNAP-IN ADAPTER (ORDER FACTORY DIRECT OR BUILD YOURSELF)

$5.00 SHIPPING ▫ $5.00 C.O.D.
VISA ● MASTERCARD ● AMEX

ANDROMEDA RESEARCH, P.O. BOX 222, MILFORD, OHIO 45150
(513) 831-9708 FAX (513) 831-7562
website - www.arlabs.com email - arlabs@worldnet.att.net MADE IN THE U.S.A.

Build Your Own Intelligent Robot, We Make It Easy!

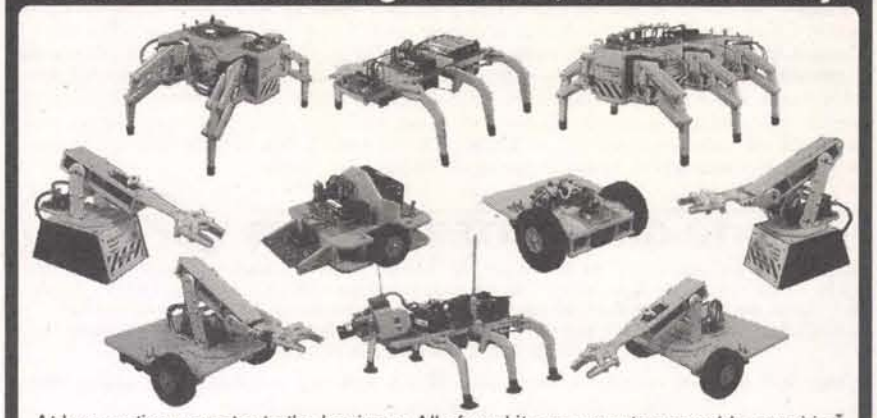

At Lynxmotion we cater to the beginner. All of our kits are easy to assemble, requiring only common hand tools in the construction process. The detailed assembly manuals include 2D and 3D exploded view diagrams. The kits can be controlled or programmed in an easy to follow BASIC programming language. The technology is here, the costs are affordable, the support is available, join in and become a robot builder!

Lynxmotion, Inc.
104 Partridge Road
Pekin, IL 61554-1403
www.lynxmotion.com

Lynxmotion
Visit our website or ask for our free catalog!

Tel: 309-382-1816
Fax: 309-382-1254
sales@lynxmotion.com
tech@lynxmotion.com

Write in 116 on Reader Service Card.

can program the speeds and feeds more accurately. On the MAX, if the motor loses significant RPM during a cut, then it's too big. If AL-6061 gets hot and gums up the tool, then the speed is too high for the feed rate. Experiment on your machine with and without cutting fluids.

The next step in making the bearing pocket is to mill out the stepped volume of the pocket. In this case, we need to cut several different diameters at each depth before incrementing to the next depth. This requires nesting another FOR-NEXT loop nested inside the one that controls the depth. The constant values for Y and J from the previous code example will be replaced by variables and the new FOR-NEXT loop will control them.

For this hole, the start diameter is equal to the finish diameter of the previous hole plus the radial increase or 1.250 + .020 = 1.270. The step size of the MAXNC10 is .0008, which is small enough that programming out to three decimal places makes sense. The start position for the center of the end mill is the start diameter minus the radius of the end mill or 1.270 - .063 = 1.207. The finish diameter is 1.657. Therefore, the finish position for the end mill is 1.657-.063 = 1.594.

So now, the nested FOR-NEXT loops will increment the cutting diameter from 1.207 to 1.594, increase the depth by .020, and then loop back until all the diameters at all the depths have been cut.

In order to make things a little easier to program, we'll cut from 1.194 to 1.594. This makes the first cut smaller than all of the rest, but makes the total cut evenly divisible by .040. Since each cut starts and stops at the same X coordinate, the values for X and I remain constant. The start position for X is –3.420 The start position for Y is .992-1.194/2 = .395. The end position for Y is .992 – 1.594/2 = .195.

In order to eliminate any confusion between the value for Y and the text Y printed to the G-code file, the program will use a variable named "wye." The value for J, which is the distance from the start position to the center of the cut, starts at 1.194/2 = .597 and finishes at 1.594/2 = .797. To eliminate any confusion between the value for J and the text J printed to the G-code file, the program will use a variable named "jay." You can name a variable anything you want, but using a descriptive name will make the program easier to understand. The program now looks like this:

```
OPEN "2ndgruv.txt" FOR OUTPUT AS #1
REM move cutter to X=0, Y=0, Z=.050
PRINT #1, "G00 Z .050"
PRINT #1, "G00 X0 Y0"
REM move cutter to start position
PRINT #1, "G00 X –3.420 Y -.395"
FOR depth = .02 to .400 STEP .02
jay = .597
PRINT #1, "G01 Z -";
PRINT #1, USING "#.###"; depth
    FOR wye = .395 to .195 STEP -.04
    PRINT #1, "G01 Y –";
    PRINT #1, USING "#.###"; wye
    PRINT #1, "G03 X –3.420 Y –";
    PRINT #1, USING "#.###"; wye;
    PRINT #1, " I0 J –";
    PRINT #1, USING "#.###"; jay
    jay = jay +.04
    NEXT wye
NEXT depth
CLOSE
END
```

Here are the first 27 lines of G-code generated by the above program:

```
G00 X 0 Y 0 z .05
G00 X -3.42 Y -.395
G01 Z -0.020
G01 Y -0.395
G03 X -3.420 Y -0.395 I0 J -0.597
G01 Y -0.355
G03 X -3.420 Y -0.355 I0 J -0.637
G01 Y -0.315
G03 X -3.420 Y -0.315 I0 J -0.677
G01 Y -0.275
G03 X -3.420 Y -0.275 I0 J -0.717
G01 Y -0.235
G03 X -3.420 Y -0.235 I0 J -0.757
G01 Y -0.195
G03 X -3.420 Y -0.195 I0 J -0.797
G01 Z -0.040
G01 Y -0.395
G03 X -3.420 Y -0.395 I0 J -0.597
G01 Y -0.355
G03 X -3.420 Y -0.355 I0 J -0.637
G01 Y -0.315
G03 X -3.420 Y -0.315 I0 J -0.677
G01 Y -0.275
G03 X -3.420 Y -0.275 I0 J -0.717
G01 Y -0.235
G03 X -3.420 Y -0.235 I0 J -0.757
G01 Y -0.195
```

The entire G-code file had 225 lines. Imagine typing that! Now while we're programming, wouldn't it be nice if the program would ask some questions and do the math by itself? How about letting you add more than one hole to the G-code file? Maybe it could automatically add lines to start and stop the milling machine's spindle motor, add some comments to the text file indicating which end mill to use, and a whole slew of other things. Now think of how nice it would be if you could download that program from the *Nuts & Volts* website (www.nutsvolts.com) and not do any programming at all! Go for it!

As is, it probably won't work for anything but the MAXNC 10 G-code interpreter, but with a few modifications, it would probably work for any machine's interpreter.

It is not an example of "How To Program Right" (the author is not a programmer), or even "How To Machine Right" (he is not even a machinist), but an example of how easy it is to program a solution to the problem of endless hours of typinfg code and korecting misteaks (he can't even type!). **NV**

### G-codes:

G0 Rapid Travel
G1 Linear Interpolation
G2 Circular Interpolation CW
G3 Circular Interpolation CW
G4 Dwell
G12 Full Circle Cycle CW
G13 Full Circle Cycle CCW
G17 XY Plane for Arcs
G40 Radius Offset Cancel
G41 Radius Offset Left
G42 Radius Offset Right
G43 Height Offset Activation
G49 Height Offset Cancel
G61 Input Signal Sensing
G80 Drill Cycle Cancel
G81 Drill Cycle
G82 Drill Cycle with Dwell
G83 Pecking Drill Cycle
G85 Boring Cycle
G90 Absolute Input
G91 Incremental Input
G92 Position Preset

### M-codes:

M0 Program Stop
M1 Optional Stop
M2 End of Program
M3 Spindle Start CW
M4 Spindle Start CCW *
M5 Spindle Stop
M6 Tool Change
M7 Coolant On
M8 Coolant On
M9 Coolant Off
M30 Program Reset
M99 Repeat program


**Metric**
**Equipment Sales, Inc.**

**800-432-3424**
Fax: 510-264-0886
www.metricsales.com

RENT • BUY • SELL
Yes, we will buy your surplus equipment!

**Scopes, Meters, Analyzers, Power Supplies, Signal Generators, Counters, Recorders and more**

Hewlett-Packard, Tektronix, Fluke, Dranetz, TTC, Anritsu, Wavetek, Keithley, and more

**Test & Measurement Instruments**

**Over 7000 Models • 6-Month Warranty**
**Save 30-90% • 5-Day Free Trial**

# Miniature Transmitters and Receivers

## 2 Button / 3 Channel Transmitter

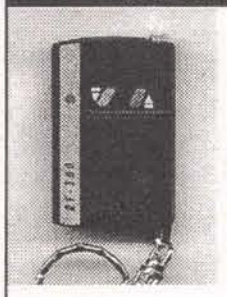

**RF300T**

1....$22.95
5.....$19.95 ea
10...$16.95 ea

**RF300XT**

1....$25.95
5.....$22.95 ea
10...$19.95 ea

- 300' (XT), 150' (T) Range
- Frequency: 318 MHz
- 59,049 Settable Security Codes
- 12 Volt Battery and Keychain Included
- Current Draw: 4.8 ma
- Fully Assembled in Case
- Dimensions: 1.25" x 2.0" x .5"
- Push both buttons for the 3rd Channel
- Slide Button Cover Included

## 4 Button / 15 Channel Transmitter

**RF304XT**

1....$27.95
5.....$24.95 ea
10...$21.95 ea

- 250' Range
- Frequency: 318 MHz
- 6,561 Settable Security Codes
- 12 Volt Battery and Keychain Included
- Current Draw: 4.6 ma
- Fully Assembled in Case
- Dimensions: 1.35" x 2.25" x .5"
- Push combination of buttons to achieve up to 15 channels

## 2-4 Data / 3-15 Channel Receivers

**RF300RL**
**RF300RM**

1....$27.95
5.....$24.95 ea
10...$22.95 ea

**RF304RL**
**RF304RM**

1....$29.95
5.....$26.95 ea
10...$23.95 ea

- Compatible with 300/4 Transmitters
- 11-24 volts DC Operating Voltage
- 13 ma. Current Draw
- Latching (L) or Momentary (M) Output
- Kits Available (subtract $5.00 ea.)
- Dimensions: 1.25" x 3.75" x .5"
- 2 (300) / 4 (304) Output Data Lines
- Binary to Dec / Hex Converter can achieve up to 15 channels

- Alarm Systems
- Garage / Gate Openers
- Lighting Control
- Magic Props
- Medical Alert
- Monitoring Systems
- Industrial Controls
- Surveillance Control
- Motor Control
- Schematics Available
- Receiver Board Layout Available
- Custom Design Consulting Available

**Visitect Inc.** (510) 651-1425 Fax: (510) 651-8454 Email: Support@Visitect.Com
P.O. Box 14156, Fremont, CA 94539 Visa / Mastercard, COD

Write in 38 on Reader Service Card.


*Continued from page 42*

## COMPUTER EQUIPMENT WANTED

**WANTED: FOR** historical museum, pre-1980 microcomputers, magazines, and sales literature. Floyd, VA 24091-0341 (540-763-3311/540-382-2935).

**WANTED: MILITARY** capacitors, resistors, transistors, diodes, ICs, semi's, etc. Please fax/E-Mail excess lists & RFQs 818-769-1002 fax 818-769-1084. electmatind@earthlink.net & http://www.militarycomponents.com

**DEC EQUIPMENT WANTED!!!** We are buying DEC systems, boards, terminals, drives and peripherals. Also Scientific Micro Systems (SMS), DSD, Datability, Dilog, other DEC compatibles, and Computer Output Microfilm (COM) units. Please call for a quote or fax us your equipment list. We buy, sell, and trade. **KEYWAYS, INC.**, 937-847-2300 OR fax 937-847-2350.

**HP CALCULATORS** wanted: models 10, 70, calculator watch, others for private collection. Cash paid. Bob Morrow, 765-855-2348, rkmorrow@aol.com

**www.nutsvolts.com**

## TEST EQUIPMENT

**FEITEK PROVIDES** repair, calibration and traceable certifications of test equipment. Free estimates. We buy, sell and trade all makes of test equipment. Visa and MasterCard accepted. Check out our inventory and specials at WWW.FEITEK.COM 2752 Walton Road, St. Louis, MO 63114, 314-423-1770.

**BROWSE OUR** Web site and check out the "monthly special." TDL Technology, Inc., www.zianet.com/tdl

**KENTRONIX TEST EQUIPMENT SPECIALS**. Check our WEB site at **http://www.kentronix.com** for monthly specials. We are also looking to buy test equipment, coaxial and waveguide components, manuals, etc. Contact Brian at 732-681-3229 or FAX 732-681-3312. E-Mail: brian@kentronix.com

**DEC EQUIPMENT WANTED!!!** We are buying DEC systems, boards, terminals, drives and peripherals. Also Scientific Micro Systems (SMS), DSD, Datability, Dilog, other DEC compatibles, and Computer Output Microfilm (COM) units. Please call for a quote or fax us your equipment list. We buy, sell, and trade. **KEYWAYS, INC.**, 937-847-2300 OR fax 937-847-2350.

**POOR MAN'S** Spectrum Analyzer/ Monitor Receiver Kit. 2 to 1,700 MHz. Basic kit only $98. Now available with switched resolution filters, tracking generator and direct digital frequency readout. Works with ANY scope or IBM compatible computer. Send stamped envelope for details. Science Workshop, Box 310B, Bethpage, NY 11714. http://www.science-workshop.com

**WANTED: MILITARY** capacitors, resistors, transistors, diodes, ICs, semi's, etc. Please fax/E-Mail excess lists & RFQs 818-769-1002 fax 818-769-1084. electmatind@earthlink.net & http://www.militarycomponents.com

**TEST EQUIPMENT** technicians needed: calibration and repair techs. Three full-time openings. We are located in Broomfield, Colorado, between Boulder and Denver. We perform electronic and physical/dimensional calibrations. Please send resume to irl@calibration.com

**AFFORDABLE HP** power sensor repair! Most 8481As repaired for $305 or less. We also handle 478As and many others. Call or fax for more information. Willamette RF, Inc., 541-754-7226, FAX 541-753-4629.

**TPI TEST equipment deals**. 440 handheld oscilloscope with true RMS capabilities $269.95, new 373 infrared thermometer $149.95, 133 digital multimeter with rubber boot $49.95. 3-year warranty, check out our E-Deals section on our website for more information. www.j-tron.com Call J-Tron 1-888-595-8766, fax 201-398-1010.

## SECURITY

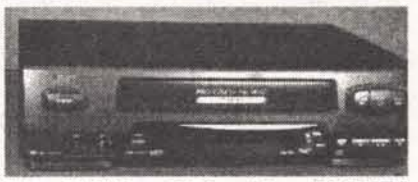

**40 DAYS and 40 NIGHTS RECORDER**. TLR-6960 time lapse, can be activated by either contact closure or continuous duty operation with standard T-120 tape. Special price **$499**. Matco, Inc., Schaumburg, IL 1-800-719-9605. E-Mail: nsales@mat-co.com Web site www.mat-co.com

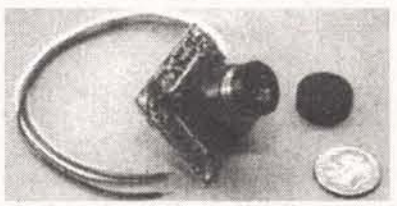

**LOW VOLTAGE B/W high RES 430 line CAMERA** with optional black low-profile swivel adjustable enclosure. Pin hole or Std. lens type. 6, 8, and 12mm lens are available. 1/3" CCD, 3.6mm/F2.0 lens included; works from **7.5-13 VDC**, highest voltage range in market. 0.08 lux, IR sensitive; 1.27" x 1.27" x 0.5"D pinhole or 1" deep standard. **$49 each** SPECIAL PRICE FOR JUNE. Enclosure: $8; optional lens: $18. Dealers welcome. MATCO, Inc. 1-800-719-9605. Fax 847-619-0852. E-Mail: sales@mat-co.com Website: www.mat-co.com



Write in 39 on Reader Service Card.

**SCANNING MOTOR — A-330SC** with universal mounting bracket accepts all standard 1/4 x 20 threaded CCTV cameras. No tilt, just PAN. 75 degrees of continuous motion with a scan rate of 5 seconds per cycle. 110 volt indoor operation, but can be adapted for outdoor use. Includes 12 foot power cord. Perfect solution to triple your effective camera viewing angle! **$39/each**, or **$25/each** in qty. of 4. Small size, 3-1/2"D x 2"H. MATCO, Inc., Schaumburg, IL. 1-800-719-9605. E-Mail: sales@mat-co.com Website www.mat-co.com

**AS-1004**, FCC approved. 2.4GHz transmitter & receiver with audio! Capable handling total of 4 wireless cameras, range: >300'. Built-in camera, 400 TV line. **$219 per system**. Additional cameras at **$129/each**. Matco, Inc. 1-800-719-9605 Fax: 630-350-9546. E-Mail: nsales@mat-co.com Web site www.mat-co.com

**QUAD VIDEO CABLE MODULATOR**. CVS-600 inserts 4 color or black & white composite video signals on unused cable channels, 81 thru 95. Watch 4 remote security cameras from any TV in your home! Built-in signal amplifier and comb filter eliminates any ghosting and actually **IMPROVES** existing video! Only one unit needed with existing cable system. $199/each and **$169/each** in qty. of 4. MATCO, Inc., 1-800-719-9605. E-Mail: sales@mat-co.com Website www.mat-co.com

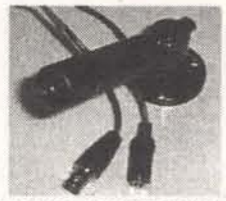

**CCD BULLET CAMERAS B/W & COLOR**. AX-800 series, weather resistant high impact design with swivel bracket. Will work with Matco's scanning motor. 3/4" diameter x 3" long approx. B/W: 400 line/0.2 lux. **$89/each**. Color: 350 lines/2 lux, **$139/each**. MATCO, Inc., 1-800-719-9605. E-Mail: sales@mat-co.com Website www.mat-co.com

**WEATHER RESISTANT OUTDOOR CAMERAS**. WR-700 type, high impact tempered glass with stand. Black & white (430 lines), or color (420+ lines) available. Standard 3.6mm lenses with optional lenses of 6, 8, and 12 mm at $20 extra. **B/W $119/each**. **Color $179/each**. Small compact size with sun shield. MATCO, Inc., 1-800-719-9605. E-Mail: sales@mat-co.com Website www.mat-co.com

**USE PC MONITOR AS SECURITY MONITOR**. The VGA-801 accepts standard NTSC or PAL inputs for display on any existing VGA/SVGA computer monitor. Small compact size. Over 600 lines of resolution, twice that of standard TV monitor! **$69 each**. Dealers welcome. MATCO, Inc., 1-800-719-9605; Fax 847-619-0852; E-Mail: sales@mat-co.com Website: www.mat-co.com

**ALARMLAND.COM SECURITY** devices for professionals. Motion detectors, panels, contacts, CCTV, and more. Fax your order to 732-840-1390.

**SURVEILLANCE-COUNTERSURVEILLANCE**: I buy and sell used equipment. Steve 410-879-4035.

**COUNTER-SURVEILLANCE=$250 HR!** Electronic eavesdropping is unbelievably widespread! Are you sure you're safe? Learn how others (without prior experience) earn **$250 HR** in the fascinating field of COUNTER-SURVEILLANCE! For FREE catalog call: **1-800-732-5000**. HTTP://WWW.SPY-CITY.COM

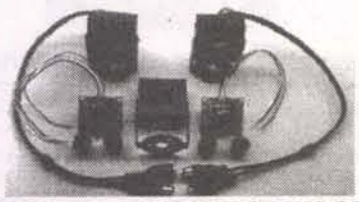

**COLOR — LOW LIGHT 2 LUX** CCD pin hole and standard lens available, only 1.37" x 1.37". **$109** each, enclosure $10 extra. Sony sensor. Matco, Inc., 1-800-719-9605 Fax: 630-350-9546. E-Mail: nsales@mat-co.com Web site www.mat-co.com

**SHAPE-MEMORY ALLOY LINEAR ACTUATOR**
One inch-pound actuator made of Tinel.® Applications include robotics, doors, valves, toys, shutters, security devices, manipulators. Operated by temperature or electricity. De-energized length: 100mm. Energized length: 75mm. Self-activating temperature: 165°F. Spec sheets included.
**95T001** **$7.95 each**

**CLIP-ON FAN**
For 75-233MHz Pentium.
**98C003** **$4.95 each**

**FAST BLOW FUSES**
3AG, 0.5A,250V. Box of 100. Littelfuse #312.500.
**20B004** **$5.00/box**

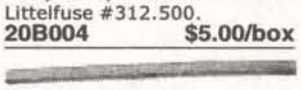

**ONE POUND BAR OF SOLDER**
Made by Kester. 63% Sn, 37% Pb, 13" approx. length of bar.
**20Z011** **$4.50 each**

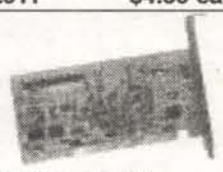

**PLUG & PLAY IDE CD-ROM INTERFACE CARD**
System requirements: IBM PC 386SX, Windows 95 or better, 16-bit ISA bus slot. Supports up to two ATAPI CD-ROM drives. No DMA support. All settings are PnP setable. External Connectors: 16-bit I/O polled CD-ROM interface.
**98C007** **20 for $19.95**

**H-P MICROWAVE TRANSISTOR**
Stripline 35828E. 10-13 dB gain at 2 GHz, usable to 6 GHz. Noise figure 2 dB typical at 2 GHz. 25V, 35mA, 600 mW maximum ratings. 17.5 dB (-50 mW) at 1dB compression.
**93S008** **$4.99 each**

**GOBS OF GOODIES!**
**Studioline Stereotrack II Cable TV Adapter** separates stereo signals from the cable TV input, feeds RF signals to TV/VCR tuner. Has audio out stereo signals. Hundreds of useful parts for audio/RF projects. Controller board has CPU and EPROM, Mitsumi varactor tuner, cable/FM separator board, regulated power supply subassembly, channel select board, and stereo separation output board. With documentation.
**92V020** **Two for $39.95**

**ELECTROLYTIC CAP**
820µF, 200V, snap-in radial.
**96P002** **$3.79 each**

**METER CASE**
Hard plastic. 6"x 3" x 2".
**97U014** **$3.00**

**RESISTOR RIOT**
1/8, 1/4, 1/2 Watt, power, precision, fixed, adjustable, etc. Thousands of pieces.
**20P003** **5 Lbs. for $9.95**

**LIQUID CRYSTAL SHUTTER/ VARIABLE DENSITY FILTER**
0.5" x 1.625" active area. 0% to 23% transmission. Switching rate up to 4 KHz. Specs included.
**92L012** **$9.95 each**

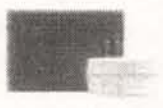

**12VDC Ionizer Air Purifier Kit**
Breathe mountain-fresh air all day long! This Ionizer Air Purifier quietly and efficiently fights indoor air pollution. It eliminates stale air odors, noxious fumes and organic irritants. You'll breathe easier and feel better. Destroys bacteria and reduces molds, mildew and allergens. Covers an entire 150 sq. ft. area. Size approx. 4.25" x 3" x 1.5".
**99K006** **$39.00**

**V/H COAXIAL SWITCH**
RLC Electronics No. 029-394707-004. 28 VDC, four SMA connectors, with pinout sheet.
**96B001** **$90.00 each**

**PELTIER JUNCTION**
480 junctions (6mm x 1.4mm), max current 2.5A. Overall size 2"L x 1.188"W x 0.125"D, metallized both sides.
**99U009** **$29.95 each**

**CCD COLOR VIDEO CAMERA**
Auto light control, NTSC, 5V camera. Dimensions: 4 1/2" Long x 2 1/2" Wide. Cables, (keyboard plug power adapter for use with PCs and video capture card) included. Runs on 5VDC @ 100mA. To use independently of PC, CCTV, VCR, etc., order our 99E006 power supply ($7.95). **CLOSEOUT**
**99V006S** **$49.95**

**BLUE LED**
T1-3/4 blue water clear.
**SE5064N** **$4.95 each**

**STK011**
Hybrid audio power amp, 6.5W min., Vcc = 10V max. 10-lead SIP. Pinout included.
**94I018** **$39.95 each**

**SPLITTER/ COMBINER**
Mini Circuits Labs. #ZSC2-1W-1. 1-650 MHz "BNC" connectors.
**92J052** **$29.95 each**

**ATARI 1020 COLOR PRINTER**
For all Atari 8-bit computers. (Not PC-compatible!) Package includes: printer, power supply, software, pens, paper and interface cable. These are new units in factory sealed boxes.
**94C037** **$14.95 each**

**FIXED VOLTAGE BENCH POWER SUPPLY**
MG Electronics PS-32. Input voltage: 105-125 VAC 60 Hz. Output voltage: 13.8 VDC. Output current: 30 Amps continuous 32 Amps surge. Brand new!
**95E019** **$169.95 each**

**LAPLINK PARALLEL CABLE**
Six-ft. "competition yellow" DB-25M to DB-25M cable. Works with LapLink, pcAnyWhere, or Win95/98 Direct Cable Connection and similar programs.
**98W005** **$5.95 each**

**9 VDC 1.0 A WALLWART**
Center positive coaxial connector.
**96E009** **$5.95 each**

**UNIVERSAL REMOTE CONTROL**
Works with TVs, VCRs, cable boxes, etc. With docs and list of devices it may control.
**99V020** **$9.95**

**UNIPOLAR STEPPER MOTOR DRIVER IC**
UCN5804. Drives a unipolar stepper in one of three operating modes: single phase, two phase or half step. Up to 1.25 Amps per phase. Step and direction input. Drive with a 555 timer, parallel port, etc. Build your own robot, anything that requires precision positioning.
**93I002** **$4.50 each**

**NIPPON PULSE MOTOR**
7.5 deg./step, 48 s/rev, 5 V, stepper with brass gear mounted on shaft. NPM P/N PF42-48ES. With spec sheet.
**92M010** **$3.95 each**

**SPECIAL PACKAGE!**
One 93I002 IC and 92M010 motor (both shown above) with schematics.
**93I003** **$7.95/set**

# ALLTRONICS

2300-D Zanker Road - San Jose, CA 95131-1114
**(408) 943-9773 - Fax (408) 943-9776**
*Download our New Catalog: http://www.alltronics.com*

Store Hours: 9-6 M-F & 10-3 Sat. - Pacific
Visa, M/C, AmEx Accepted. All Sales Final.
California Residents Add Sales Tax.
Shipping Additional on All Orders
Prices Subject to Change Without Notice.
Prices Good 60 Days from Date of Publication

011000

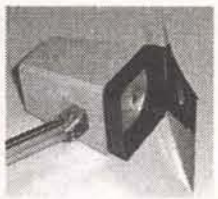

**INFRARED FILTER ELIMINATES 99.9% OF ALL VISIBLE LIGHT** — IR-9000.All B/W CCD cameras are IR sensitive. Place a 25 watt or less light behind the 3" x 3" filter, and you will see in the DARK. $18/each. Purchase 2 for $30. MATCO, Inc., 1-800-719-9605. E-Mail: sales@mat-co.com Website www.mat-co.com

**VIDEO TAPE BURGLARS CAR/HOME**. 2-zone alarm system sends remote control commands to your VCR (on, record, stop, off). Warning & alarm zones. Includes UL singlegang box, cover, circuit board, emitter cable. Requires 12VDC.VSS-1 **$99**. Dealers welcome. **www.burglarvideo.com** Fax 310-545-5958.

**www.nutsvolts.com**

**SEEKING DISTRIBUTORS** FOR SECURITY PRODUCTS. Matco, Inc., Schaumburg, IL 630-350-0299. www.mat-co.com

**SEE ADMART SECTION**, pages 76 and 77 for other MATCO products, including wireless systems.

## SATELLITE EQUIPMENT

**FREE FLYER** on DBS files, hacking, hardware info. Smart card socket $5 ea. New Atmel 89C52 $10 ea. Bill 1-800-879-9657.

**FREE BIG** dish catalog. Low prices! Systems, upgrades, parts, and "4DTV." Skyvision, 1010 Frontier Dr., Fergus Falls, MN 56537. www.skyvision.com **Call 1-800-543-3025**.

**BEST PRICING** on 18" satellite TV systems for home and RV. DISH Network DirecTV, multi-room viewing options, accessories, more. www.skyvision.com **Call 1-800-543-3025**.

**WANTED: MILITARY** capacitors, resistors, transistors, diodes, ICs, semi's, etc. Please fax/E-Mail excess lists & RFQs 818-769-1002 fax 818-769-1084. electmatind@earthlink.net & http://www.militarycomponents.com

**THE EASIEST** way to recover your lost master code. 16C5X, 16C62X, PALS, GALS, other microcontrollers, custom ASICs. Chip readers and other custom hardware. Check out our web page at www.acdinc.com for details or call 703-764-5361 or write Advanced Circuit Designs, Inc., 5765-F Burke Centre Parkway #317, Burke, VA 22015.

## MILITARY SURPLUS ELECTRONICS

**WANTED: MILITARY** capacitors, resistors, transistors, diodes, ICs, semi's, etc. Please fax/E-Mail excess lists & RFQs 818-769-1002 fax 818-769-1084. electmatind@earthlink.net & http://www.militarycomponents.com

## AUDIO — VIDEO — LASERS

**FREE LASER CATALOG**. Helium-Neon, Argon, ruby, visible laser diode modules, lightshows, holography, laser pointers. Lowest prices. Midwest Laser Products, PO Box 262, Frankfort, IL 60423. 815-464-0085 **www.midwest-laser.com**

**STEREOSCOPER VR** is a stereo multiplexer that creates 3D stereoscopic video from two genlock cameras. Stereoscoper VR comes with LCS glasses and driver. 90 day warranty $247 or write to **Sync-A-Link**, PO Box 4, Locust Grove, OK 74352. Phone 918-479-6451, E-Mail: rlc@sstelco.com

**QUAD VIDEO CABLE MODULATOR**. CVS-600 inserts 4 color or black & white composite video signals on unused cable channels, 81 thru 95. Watch 4 remote security cameras from any TV in your home! Built-in signal amplifier and comb filter eliminates any ghosting and actually **IMPROVES** existing video! Only one unit needed with existing cable system. $199/each and **$169/each** in qty. of 4. MATCO, Inc., 1-800-719-9605. E-Mail: sales@mat-co.com Website www.mat-co.com

## Tired of Expensive Inkjet Cartridges ?

# Save 90% on Inkjet Inks !

| Printer (Call for Others Not Listed!) | # of Refills | | Cost/Refill | | Kit Price | |
|---|---|---|---|---|---|---|
| | Black | Color | Black | Color | Black | Color |
| HP 500 Series, 400, Officejet 300, 350, Fax | 7 | 14 | **4.71** | **2.85** | 32.95 | 39.95 |
| HP 600 Series, Officejet 500, 570, 600 | 7 | 14 | **4.71** | **3.21** | 32.95 | 44.95 |
| HP 820C, 855C, 870C, 1000C, 1150C, Copier 120, 210 | 6 | 12 | **6.67** | **3.33** | 39.95 | 39.95 |
| HP 720C, 722C, 712C, 880C, 890C, 895C 1120C, 1170C | 6 | 12 | **6.67** | **3.75** | 39.95 | 44.95 |
| Canon BJ-10, 200, 210, 240, 250 Apple SWriter 1200, 1500 | 14 | 20 | **2.15** | **2.00** | 29.95 | 39.95 |
| Canon BJC-4000 Series, C2500, C3000, C3500, C5000 | 60 | 60 | **0.50** | **0.67** | 29.95 | 39.95 |
| Canon BJC-6000 | **14** | **8** | **2.85** | **1.67** | **39.95** | **39.95** |
| Canon BJC-600, 610, 620 Apple SWriter Pro | 20 | 13 | **1.50** | **3.07** | 29.95 | 39.95 |
| Epson Stylus Color, Color Pro, Pro XL | 12 | 12 | **2.50** | **3.33** | 29.95 | 39.95 |
| Epson Stylus Color II, IIs, 1500 (Black) | 15 | 15 | **2.00** | **2.66** | 29.95 | 39.95 |
| Epson Stylus Color 500, 200 | 20 | 17 | **1.50** | **2.35** | 29.95 | 39.95 |
| Epson Stylus Color 400, 600, 800, 850, Photo / 440, 640 | 20 | 17 | **1.50** | **2.65** | 29.95 | 44.95 |
| Lexmark JP 1000, 1020, 1100, ExecJet II, IIc, Medley 4C | 10 | 17 | **3.00** | **2.35** | 29.95 | 39.95 |
| Lexmark JetPrinter 3200, 5700, 5000, Z11, Z31 | 15 | 17 | **2.67** | **2.35** | 39.95 | 39.95 |
| Compaq IJ700, IJ900, Xerox XJ8C, XJ9C | 15 | 17 | **2.67** | **2.35** | 39.95 | 39.95 |
| Xerox Home Center 450C, XJ6C Inkjet | 22 | 12 | **1.36** | **3.33** | 29.95 | 39.95 |

## SAVE 30 - 50% on New Compatible Cartridges
## New Lower Cartridge Pricing!

| Printer (CALL FOR OTHERS NOT LISTED !!) | BLACK CARTRIDGE | COLOR CARTRIDGE |
|---|---|---|
| Canon BJC-4000/5000/2000 Series, C2500, C3000 | $4.95 | $11.95 |
| C3500, C5000, C5500 Apple StyleWriter 2400, 2500 | $4.95 | $11.95 |
| Canon BJC-600, 610, 620 Apple StyleWriter Pro | $4.50 (9cc) | $4.50 @ (9cc) |
| Hi-Capacity Canon BJC-600, 610, 620 | **$4.95 (15cc)** | **$4.95 @ (12cc)** |
| Canon BJC-70, BJC-80 | $9.95 (3-pak) | $14.95 (3-pak) |
| Epson Stylus Color, Color Pro, Pro XL | **$10.50** | **$14.95** |
| Epson Stylus Color II, IIs, 200 | **$10.95** | **$14.95** |
| Epson Stylus Color 400, 500, 600, 800, 850,1520, Photo | **$10.95** | **$14.95** |
| Epson Stylus Color 440, 640, 660, 740, 760, 860 | **$10.95** | **$14.95** |
| Epson Stylus Color Photo 750, 900, 1200 | **$10.95** | **$15.95** |

- **BULK Inks, Refill Accessories**
- **Glossy card stock & Coated Paper**
- **2 - 3 Day Shipping**

**Quality Inks for:**
**HP • Epson • Lexmark**
**Canon • Apple • DEC**

***Call or see us online!***

Monday - Friday
8:30 - 5:30 PST 10:30 - 7:30 EST

Inkjet Southwest

VISA MasterCard DISCOVER

**www.inkjetsw.com** **1-800-447-3469**

**(480) 668-1069 Fax** **(480) 668-0959**



Write In 41 on Reader Service Card.

**SYNC-A-LINK UNIVERSAL video sync generators**. For more details phone 918-479-6451, E-Mail: rlc@sstelco.com or write to **Sync-A-Link**, PO Box 4, Locust Grove, OK 74352.

**ANTIQUE VIDEO TRANSFER SERVICE**: transfer any 2" QUADRUPLEX tape. Affordable fast! Phone/fax 415-821-7500 or 415-821-3359. 5001 Diamond Heights Blvd., San Francisco, CA 94131-1621.

**WANTED: PRO** video equipment, VCRs, switchers, cameras, etc. Advanced Media 702-874-1911.

**USE PC MONITOR AS SECURITY MONITOR**. The VGA-801 accepts standard NTSC or PAL inputs for display on any existing VGA/SVGA computer monitor. Small compact size. Over 600 lines of resolution, twice that of standard TV monitor! **$69 each**. Dealers welcome. MATCO, Inc., 1-800-719-9605; Fax 847-619-0852; E-Mail: sales@mat-co.com Website: www.mat-co.com

**SONY PLAYSTATION MODCHIPS**. Allows you to play CDR backups & imports. $8 ea. $3 shipping. 619-749-7788.

**BROADCAST VIDEO** equipment wanted: all types, new or old. Please call, Jon with info. 1-800-539-2859.

## CABLE TV

**NEW! CABLE** converter electronic service equipment and supplies for most cable converter boxes. Highest service, lowest prices. Call Ken Erny Electronics. 24 hr. order and information hot line 516-389-3536.

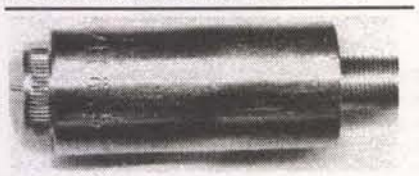

**NOTCH FILTERS** 110, 108.5, 106.5, 97.5 75dB deep notch. $19.95 ea., 1-5 qty. $15.95 ea., 6-10 qty. $11.95 ea., 11-20 qty. $9.95 ea., 21 or more qty. Call 24 hr. order and information hot line 516-389-3536.

**CABLE CONVERTERS.** Original equipment with remote. Like new. Lowest prices. Guaranteed, ready to go. Limited models. Call for flyer 412-833-0773.

**RAW CONVERTERS** CFT 2254 $110, DPBB-7 $70, PIO 5135 $40, PIO 6110 $60, PIO 6310 $70, TOCOM 5503 VIP $30, SA 8600 $85, SA 8590 11B $70, SA 8590 10B $60, CFT 2014 $80, ZENITH ST-1600 $60. CALL FOR MORE 405-631-1856 OR EMAIL LEDV@NETZERO.NET

**UNMODIFIED CABLE** CONVERTERS. Zenith ST1600, ST1086, ST300, Panasonic 175, 145 vol. & non-vol. Regal RR-92 & RC 83, DP5, DP7, DRZ, 5503 VIP, SA 8580. Guaranteed low prices. Please call for more converters 405-631-1856.

**TOCOM UNMODIFIED** 5503 cable converters, untouched, $6 ea. 10 lot min. Call 706-657-4445.

**UNMODIFIED ORIGINAL** equipment. Jerrold, SA, 125 channel converters. Lowest prices guaranteed. Dealers only. SA 8580 as low as $35. Call now 214-476-7177.

**NEW 125** CHANNEL VOLUME CONVERTER $59. PANASONIC TZPC-175 $39 (RAN). BUY FACTORY DIRECT & SAVE. DEALERS WELCOME. 405-616-0100.

**NEW IN BOX 860MHz** analog converters. Enjoy the newest technology CATV equipment can offer along with superior quality all in one unit. Channel ouput 3 or 4. HRC, IRC, standard switchable. Includes 1 set of audio/video cables, 1 RF quick connect cable and remote control. Parental control, sleep timer, last channel recall, memory 1 thru 4, and volume control are all available on remote. Minimum order taken for 10 pcs. at $59.95 each. $49.95 for 50 pc. order. Significant savings on larger quantities. Call 706-657-4445.

**ZENITH UNMODIFIED** converters. ST 1600, $29.95 ea. 10 lot min. Call 706-657-4445.

**COMPLETE CONVERTER REPAIR.** All makes, free estimates. Please leave a brief message with the make, model number, and the problem you are having. NO BOX, CHIPS, or CA repairs. 909-685-6399.

**ONE STOP** SHOP: FOR ALL YOUR CABLE NEEDS. UNMODIFIED DPBB-7312, CFT 2014, CFT 2224; S/A 8550 TO 8600; ZENITH: ST 1601, PIO BA 6310. CALL FOR BEST PRICES. JERROLD 550 AND PANASONIC HAND REMOTES ONLY $2.95 EACH. ALSO, UNIVERSAL 3-1 REMOTE WORKS ON CFT UNITS $3.95 EACH. CALL FOR FREE CATALOG. 405-631-5153.

**RAW CONVERTERS**: Pio 5135 $45; Zenith ST 1600 (99 channel) $65; S/A 8590 (10 button) $65, 8590 (11 button) $75; Tocom 5503 VIP (400MHz) $35, Tocom 5507 $45; CFT 2014 $85, CFT 2224 $115; DPBB-7 $75; S/A 8600 $95. Also, hand remotes as low as $2.95. Call for items not listed. 405-634-1535.

**UNMODIFIED CABLE** converters. SA 8590, $24.95 ea. 10 lot min. Call 706-657-4445.

**UNMODIFIED DPV-7 $35, CFT 2014 $65, S/A 8600 $65. POWER-UP, 30-DAY WARRANTY. MINIMUM 10-LOT, CALL FOR OTHER ITEMS NOT LISTED. 405-692-4982.**

# ALL ELECTRONICS CORPORATION

*QUALITY Parts*
*FAST Shipping*
*DISCOUNT Pricing*

**CALL, WRITE, FAX or E-MAIL For A Free 96 Page CATALOG.**
Outside the U.S.A. send $3.00 postage.

### Low, Low Price Color CCD Video Camera

Sharp # YH-7S50. New, NTSC, color CCD video camera. Ideal for surveillance or video conferencing. 2" dia. x 3.35" long. Adjustable table-top stand. 6' cable with RCA plug for video and 2.5mm I.D. coax plug for power. Operates on 4.5 – 7 VDC @ 1 Watt (Power supply not included). Features: 512 x 492 pixels. 300 line resolution. 20 lux min. illumination. Auto white balance. F2.2 lens. 3.8 mm focal length. Manually adjustable focus from 30mm to infinity. **CAT # VC-250**

20 or more $40.00 ea. — **$43.75 each**

For power supply we suggest our regulated 5.7 Vdc @ 700 ma. supply. Needs plug replacement to mate with camera. Appropriate connector and instructions are included.
**CAT # PS-577** $5.50 each
20 or more $5.00 each

### Special Quantity Purchase Nickel-Metal Hydride AA "Flat-Top" Cells

Panasonic # HHR-11AA0
1.2 Volt, 1100 mAh "flat-top" rechargeable AA cells. These cells are designed for use in battery packs; they do not have the raised button found on most replaceable batteries. 0.55" diameter X 1.95" long. Large quantity available. Two styles:

**REGULAR-FLAT TOP**
**CAT # NMH-110**

**$1.50 each** — 40pcs $1.25 • 120pcs $1.00 • 800pcs 85¢ each

**SOLDER-TABBED**
**CAT # NMH-110T**

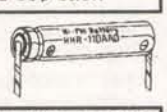

**$1.75 each** — 40pcs $1.50 • 120pcs $1.25 • 800+ $1.00 each

### 12 VDC 2.5 Amp Switching Power Supply

Plug-in-wall regulated switching power supply. Ideal for cameras, scanners, cell phones, computers or any devices sensitive to power fluctuations. Input: 100 - 240 Vac. 6 foot output cord has a coax DC power plug (2.1mm id, 5.5mm od). Tip positive. Ferrite snap-bead for EMI suppression. Compact, 3.23" x 2.23" x 1.38" UL, CSA, CE. **CAT # PS-1225**

**$10.00 each** — 10 for $9.25 each, 100 for $8.50 each

### Modular CD Racks

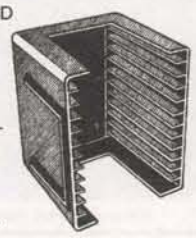

Organize your CDs or CD ROMs with these high-impact, black plastic CD storage racks. Slots for 12 jewel cases. Each 12 CD module can interlock vertically and horizontally with other modules. Can be free-standing or wall mounted.

**CAT# CDR-3**
10 for $17.50 — **$2.00 each**

### Laser Level

Accurate and easy to use for short and long distance leveling. Center the bubble, and anything that intersects the beam is at exactly the same height. Use it to match heights in large rooms or across buildings. Set and align electrical and plumbing fixtures, cabinets and shelves. Rugged, black anodized aluminum housing with pocket clip. Locking push button switch to prevent unintended actuation. Includes two AAA batteries.
**CAT # LL-1** — **$16.95 each**

### Phone Line Privacy Protector

Ora Electronics # MP-700 Protects modem, fax and voice transmissions from interruption. Prevents eavesdropping of phone conversations. The first device to answer or access a line secures the line. All of the others are denied access until the first device hangs-up. Easy to use. Installs in seconds between phone line and wall jack. Note: You need one unit for each instrument sharing a line.
**CAT # TLM-20**

**$1.50 each** — 10 for $12.50, 100 for $90.00

### 25 Amp (Used) Solid-State Relay

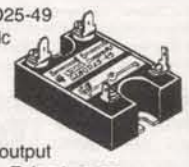

Crouzet/ Gordos # G280D25-49
Control Voltage: 3 – 8 Vdc
Load: 25 A, 24-280 Vac
2.25" x 1.75" x 1" metal-backed epoxy package. Screw terminals.
Back-to-back (dual) SCR output for severe inductive loads. False turn-on immunity and positive turn-off at high dv/dt. Removed from equipment. "Like-new" condition. Although input is marked 3-8 Vdc, will operate at 12 Vdc. UL, CSA, CE.
**CAT # SSRLY-2503U**
10 for $100.00 — **$11.00 each**

### 8 Ohm, 25 Watt Power Resistor

Dale RH-25, 8 ohm 1% Aluminum-encased precision power resistor. Body size, 1.07" x 0.57" x 0.55" high. Solder lugs extend 1.9". Screw-mounts to chassis or heat sink for improved cooling efficiency.
**CAT # 8-25** — **$1.50 each**

**ORDER TOLL FREE 1-800-826-5432**
**Shop ON-LINE www.allelectronics.com**

MAIL ORDERS TO:
*ALL ELECTRONICS CORP.*
P.O. BOX 567 • VAN NUYS, CA 91408-0567

FAX (818) 781-2653 • INFO (818) 904-0524
*E-MAIL allcorp@allcorp.com*

NO MINIMUM ORDER • All Orders Can Be Charged to Visa, Mastercard, American Express or Discover • Checks and Money Orders Accepted by Mail • Orders Delivered in the State of California must include California State Sales Tax • NO C.O.D • Shipping and Handling $5.00 for the 48 Continental United States - ALL OTHERS including Alaska, Hawaii, P.R. and Canada Must Pay Full Shipping • Quantities Limited • Prices Subject to change without notice.

*MANUFACTURERS - We Purchase EXCESS INVENTORIES... Call, Write, E-MAIL or Fax YOUR LIST.*

Write in 42 on Reader Service Card.

# SINGLE CHIP COMPUTER!

- Zero External Components
- Built-in BASIC / Assembly
- RS232 Program Download
- 1K flash, 64ee, 3irq, 2timers
- 15 I/0 bits, A/D comparator
- 20mips, faster than pic/8051
- 20 pin DIP part #MV1200

$1.99 OEM (1K) EVAL KIT (1) $7.00

## NEW! 8K SUPER CHIP

Improved BTERP with 40 times the BASIC program capacity
- 40 pin DIP part #MV8515 - 32 I/O, 12 irq, 3 timers, bus
- 8K flash, 512 ee, 512 nvram - Watchdog with internal osc.

$5.40 OEM (1k), Eval Kit $19.00

# PC SOLID STATE DISK

$21 OEM (1k), EVAL $75
FLASH,NVRAM,ROM
256K-16M DIP/PCMCIA

# $95 UNIVERSAL PROGRAMMER

FLASH,EPROM,NVRAM,EEPROM to 8meg (27080). Adapters for micros, PLCC, etc.. Parallel port version for notebooks. FAST and EASYTO USE.

# PC WATCHDOG!

NO MORE HANGUPS.. Reboots PC on hardware or software hangup.. . oem $21, eval $75

# LCD VGA $27

OEM (1k), eval $95
640x480 controller
use with PC or SBC

# $27 MINI PC

$27 OEM, Eval $95, includes: DOS, 3 ser, 2 par, rtc, NVmem, Built-in LED display, ISA bus, Keyboard and LCD interfaces. COMPLETE !!! Not a "core" or "engine". All utilities and tutorial included. Use Turbo C, BASIC, MASM. 386 version: $42 oem, $195 eval

3"x4"

WWW.STAR.NET/PEOPLE/~MVS
MVS Box 850
Merr.,NH 03054
(508) 792 9507
MVS
5yr Limited Warranty
Free Shipping
Mon-Fri 10-6 EST

Write in 43 on Reader Service Card.

DesignNotes.com
Your Design Resource on the Web

Improve Your Design Skills, Find Project Advice and More

$1200 Grand Prize Contest! It's October & time for our yearly Grand Prize drawing. Last chance to submit your designs & compete against the previous monthly winners for $1200

Visit Our Online Forum

On-Line Circuit Archive
*Hundreds of Circuits. Over 23 Different Topics*

**October Fest!**
To celebrate our first successful year on the web, we're offering all merchandise on our web site at a 10% discount!
**Order Now!**

Share What You Know and Learn What You Don't

Visit Us at www.designnotes.com

Write in 44 on Reader Service Card

**BRAND NEW** basic converters, 550MHz w/remote, $9.95 ea. 10 lot min. Call 706-657-4445.

**ATTN: CABLE BROKERS. THE FOLLOWING UNMODIFIED CONVERTERS FROM CB SYSTEMS FIELD-PULL AVAILABLE IN 100-LOT. ZENITH ST-1600 $25 EA., JERROLD DPV-5 $15, DPV-7 $19, CFT 2014 $45, S/A 8600 $49, PIO-BA 9515 $65. MANY OTHER RAW EQUIPMENT, WE CAN LOCATE FOR YOU. CALL 405-634-1535.**

**NEW INTEGRATED CIRCUITS.** PIC16C's, EPROM 27C's, GAL16C's, GAL22V's, MC68HC's, and push button switches. Many other parts available. 30 days money back guarantee. KCS 1-800-879-8820.

**NEW GI** 2 in 1 remotes $2.50 10 lot Zenith tuners refurbished $1 each. 702-308-3150.

**DISCOUNT CABLE converters, bullet snoopers, all makes and models: Genuine unmodified General Instrument, Jerrold, Tocom, Scientific Atlanta, Zenith, Pioneer, Panasonic and more. Best warranty. Free catalog 1-800-243-0962.**

**DREAMCAST MOD** chips, 4 wire model, $14 each. Also Playstation one mod chips. Auto Dino mode program. Works with all models up to 900X. Seven wire hook up, $5 each. Playstation two mod chips. New 2 in 1 program $30 each. 10% discount for 10 or more, mix and match kits. Kits come with complete color instructions, but do not come with wires. Call 703-764-5118 to place an order. Orders shipped via US mail 2 day COD.

**QUAD VIDEO CABLE MODULATOR.** CVS-600 inserts 4 color or black & white composite video signals on unused cable channels, 81 thru 95. Watch 4 remote security cameras from any TV in your home! Built-in signal amplifier and comb filter eliminates any ghosting and actually **IMPROVES** existing video! Only one unit needed with existing cable system. $199/each and **$169/each** in qty. of 4. MATCO, Inc., 1-800-719-9605. E-Mail: sales@mat-co.com Website www.mat-co.com

**CABLE PARTS!** Computer parts. Call for great prices or visit us on the Web: HTTP://WWW.CB-Electronics.com or call 1-800-436-8630.

**POSITIVE NOTCH FILTERS.** All channels available. Starting at $16 each. Order by single channel #. Top quality non-tunable metal cylinder type. 75dB deep on the notch. Need to block the video on a cable channel? Order a negative notch filter. We carry a large stock on all channels for dealers and vendors. VISA, MASTERCARD, DISCOVER, and UPS COD for established customers. Quantity pricing on 5 or more. 100 pcs. $7 each. Open 8am to 5pm CST, Monday-Friday. All sales must comply with FCC 1996 Cable Act. On the web go to **WWW.GOFILTERS.COM "THE FILTER COMPANY."** Call for all orders **1-800-235-8080.**

**SONY PLAYSTATION MODCHIPS.** Allows you to play CDR backups & imports. $8 ea. $3 shipping. Quantity discounts. 619-749-7788.

**THE EASIEST** way to recover your lost master code. 16C5X, 16C62X, PALS, GALS, other microcontrollers, custom ASICs. Chip readers and other custom hardware. Check out our web page at www.acdinc.com for details or call 703-764-5361 or write Advanced Circuit Designs, Inc., 5765-F Burke Centre Parkway #317, Burke, VA 22015.

**SEGA DREAMCAST BOOT CD-ROM.** This CD-ROM allows you to play CDR-BACKUPS and IMPORTS on your Dreamcast. Includes BOOTCD, instructions, & informational packet. For US Dreamcast's manufactured before 8/2000. Includes WWW/FTP places via Internet for downloads. $50+ shipping. 619-749-7788.

**UNMODIFIED DPV-7** $35, CFT 2014 $65, S/A 8600 $65 power-up, 30-day warranty. Minimum 10-lot, call for other items not listed. 1-800-354-7719.

**CABLE PARTS & EVERYTHING.** Parts & accessories. Best prices & quantity discounts. WE DON'T SELL BOXES. 1-800-MODULE-0.

**SA UNMODIFIED** cable converters. 8550 @ $9.95 ea., 8570 @ $19.95 ea. 10 lot min. Call 706-657-4445.

**WHOLESALE CABLE** TV box & accessories. Brand new unmodified Jerrold, Scientific Atlanta, Pioneer, etc. Please call 1-888-561-4796 10-6pm.

## TELEPHONE/FAX

**PHONE SYSTEMS WANTED!!!** We buy AT&T MERLIN, SYSTEM 25/75/85 and other AT&T phone systems. Please call for a quote or fax us your equipment list. **KEYWAYS, INC.**, 937-847-2300 or FAX 937-847-2350.

**SOHO PHONE** systems and KSU-less phones. We carry Panasonic, BBS Telecom, Bizfon, and more. Tools, connectors, wire and so much more. Fax: 732-840-1390 or alarm land.com

## COMPONENTS

**WANTED: MILITARY** capacitors, resistors, transistors, diodes, ICs, semi's, etc. Please fax/E-Mail excess lists & RFQs 818-769-1002 fax 818-769-1084. electmatind@earthlink.net & http://www.militarycomponents.com

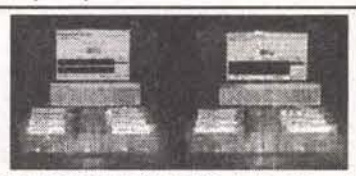

**RESISTOR KITS** Kit1 includes 12 each of 36 popular values (1-10Mohms @ 1/4W) packaged in labeled resealable plastic bags within a compact case, JUST $19.95 + $5 S&H. Send check or money order to Carlos Tovar, PO Box 596, Alpharetta, GA 30009-0596; email: cftovar@email.com visit www.canvasdesigner.com/ea (US only).

**WANT TO** Buy: ICs, military & aircraft relays, diodes, transistors, connectors, tantalum capacitors, electronic test equipment & most components. Hoffy Electronic Ent., E-Mail: Hoffie1165@aol.com 818-718-1165, FAX 818-341-5506.

**CASH PAID FOR ICs.** Military or commercial integrated circuits, transistors, diodes, any semiconductors. **ELECTRONIC SURPLUS, INC.**, 5363 Broadway, Cleveland, OH 44127. 216-441-8500 or fax 216-441-8503, since 1946. www.electronicsurplus.com

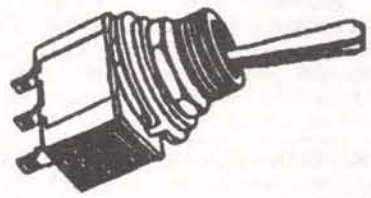

**AMAZING! 35¢ TOGGLE SWITCHES.** Brand new. Rated 6Amp/125V. Hardware included. 1/4" panel hole. SPDT or DPDT, on-on or on-off-on. Minimum 100pcs./package. Visa or MC, no COD. Gateway Products Corporation, 1-800-830-9195.

**SEE OUR** ad on 4-channel 2.4GHz wireless systems in the AdMart section on page 76. Matco, Inc.

**MATCO WILL design, engineer,** and develop a 2.4GHz wireless 8 channel solution for your remote applications. FCC approved. Matco, Inc., Schaumburg, IL 1-800-719-9605. E-Mail: nsales@mat-co.com Web site www.mat-co.com

## MICROCONTROLLERS

**WANTED: MILITARY** capacitors, resistors, transistors, diodes, ICs, semi's, etc. Please fax/E-Mail excess lists & RFQs 818-769-1002 fax 818-769-1084. electmatind@earthlink.net & http://www.militarycomponents.com

**ATMEL 89CXXXX** programmer, IBM parallel port, C++ source code, schematics, $250 + S/H. E-Mail: cbanni3061@aol.com

**PIC & ATMEL PROGRAMMERS** from $17.95 and $29.95! Visit www.electronics123.com for complete details. Amazon Electronics, Inc. Toll free 1-888-549-3749.

**PROGRAM PICs in BASIC.** Complete package to get started includes: PicBasic compiler, EPIC programmer, cable, batteries, PIC16F84. $159.95. **www.elproducts.com**

## ANTIQUE ELECTRONICS

**WANTED: MILITARY** capacitors, resistors, transistors, diodes, ICs, semi's, etc. Please fax/E-Mail excess lists & RFQs 818-769-1002 fax 818-769-1084. electmatind@earthlink.net & http://www.militarycomponents.com

**RADIO TUBES** and phono. needles. 870-347-2281.

**WANTED: AMPEX tube type** tape decks, mixers, parts. 216-486-6489 or email: blksub480@yahoo.com

**WANTED: FOR** historical museum, pre-1980 microcomputers, magazines, and sales literature. Floyd, VA 24091-0341 (540-763-3311/540-382-2935).

**ALWAYS WANTED** Western Electric theatre amps, speakers, horns, drivers, and tubes. Also seeking vintage tube equip. by Marantz, McIntosh, and Tannoy. Chong Ong, 10223 Valentino Dr., #7304, Oakton, VA 22124. Tel: 703-255-3218, Fax: 703-255-3718. E-Mail: ongkt88@erols.com

## AVIATION ELECTRONICS

**BUY, SELL**, trade, avionics equipment, Collins, King, Sperry: test equipment, IFR, Litton LTN series INUs. 941-625-3222 P, 941-625-0494 F, E-Mail: avionics@afcon.net

**WANTED: MILITARY** capacitors, resistors, transistors, diodes, ICs, semi's, etc. Please fax/E-Mail excess lists & RFQs 818-769-1002 fax 818-769-1084. electmatind@earthlink.net & http://www.militarycomponents.com

## PUBLICATIONS

**PRACTICAL ANTENNA HANDBOOK,** by Joseph Carr. The most popular book on antennas ever written, widely known as "the antenna builder's bible." This *Third Edition* is a work for anyone with an interest in antennas, from the newest of novices to the most experienced engineer. This empowering book gives you all kinds of projects and material that explains why what you did works. Only $49.95! **10% discount to *Nuts & Volts* subscribers.** Call **1-800-783-4624** to order using Visa or MasterCard.

**SECRETS OF RF CIRCUIT DESIGN** From Joseph Carr, one of today's most respected electronics authors, comes this pragmatic, intermediate-level guide to designing, building, and testing all types of radio frequency circuits. Filled with functional projects that demonstrate the principles of RF circuits. Only $29.95! **10% discount to *Nuts & Volts* subscribers.** Call **1-800-783-4624** to order using Visa or MasterCard.

**BASIC STAMP** 2 users: "Inside the BASIC Stamp II" tells how the PBASIC interpreter works, how code is stored in EEPROM, how to optimize code for space and speed. 160 pages, 50 illustrations, many examples. See http://members.aol.com/stamp2book Send $29.95 check or money order (US funds) to Brian Forbes, PMB 326, 19672 Stevens Creek Boulevard, Cupertino, CA 95014-2465.

**NEW SURVIVAL** COMMUNICATIONS BOOK. How to build complete home communications systems. Covers all needs: shortwave radio, amateur radio, citizens band, scanners, federal, weather, alternate news, satellite radio, equipment sources. How to build and use alternate emergency power sources, solar, generators, backup batteries. 200 pages. $24 Fast delivery Priority Mail. MC or Visa. Call Universal Electronics 1-800-241-8171.

**WANTED: MILITARY** capacitors, resistors, transistors, diodes, ICs, semi's, etc. Please fax/E-Mail excess lists & RFQs 818-769-1002 fax 818-769-1084. electmatind@earthlink.net & http://www.militarycomponents.com

When Visiting Disney World And Sea World. . .
Come To The World Of Electronic Surplus!

# SKYCRAFT

PARTS & SURPLUS, INC.
**ORLANDO, FLORIDA**

**Located At The Intersection Of I-4 And Fairbanks Avenue.**

Self-Service Retail Outlet Featuring Commercial And Government Electronic Surplus Including:

- ★ WIRE
- ★ SWITCHES
- ★ RESISTORS
- ★ TRANSISTORS
- ★ TRANSFORMERS
- ★ TEST EQUIPMENT
- ★ NI-CAD BATTERIES
- ★ COAX
- ★ RELAYS
- ★ HARDWARE
- ★ CAPACITORS
- ★ PANEL METERS
- ★ CIRCUIT BOARDS
- ★ INTEGRATED CIRCUITS

★ ★ ★ ★ ★ ★ ★ ★ ★

**We Buy Surplus Electronic Parts — *FAX your list.***

**www.skycraftsurplus.com**
**FAX 407/647-4831**
**PH 407/628-5634**
**P.O. BOX 536186**
**ORLANDO, FLA. 32853-6186**

**HOURS:**
**Monday - Friday 8:30-6:00**
**Saturday 8:30-5:00**

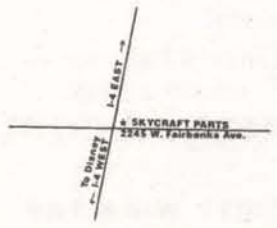


# The Pocket Programmer

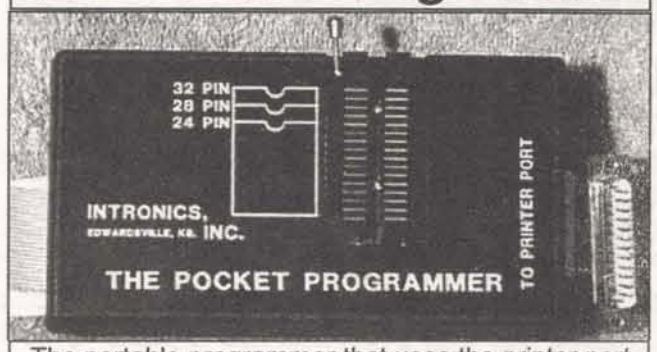


The portable programmer that uses the printer port of your PC instead of a internal card. Easy to use software that programs E(E)prom, Flash & Dallas Ram. 27(C)/28(C)/28F/ 29F/29CXXXX & 25XX series from 16K to 8 Megabit with a 32 pin socket. Adapters available for Pic, MCU's 874X, 875X, 40-Pin X 16 & Serial Eprom's, PLCC, 5-Gang, 82/74 Prom's and Eprom Emulator to 32K X 8.

Only $129.95

**Same Name, Address & Phone Number for 16 Years.... Now isn't that Amazing ?**

**Intronics, Inc.**
**Box 13723 / 612 Newton St.**
**Edwardsville, KS 66113** **Add $5.00 COD**
**Tel. (913) 422-2094** **Add $4.00 Shipping**
**Fax (913) 441-1623 Visa / Master Charge / Amex**

**OUT-OF-PRINT TECHNICAL BOOKS. www.johnsontechnicalbooks.com** 805-525-8955. **sales@johnsontechnicalbooks.com**

## ROBOTICS

**ROBOT BOOKS.COM** visit our web site for reviews of robotics books, plus robot kits, toys, movies, and magazines! www.robotbooks.com

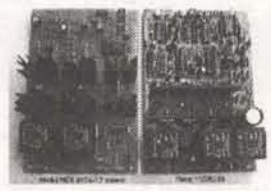

**MOTOR CONTROLLERS**, PWM, 12V, 24V, 35A, many features from $40 plus S&H. Info: 570-735-5053. Details: http://divelec.tripod.com Toll free orders (only) 1-877-679-1865.

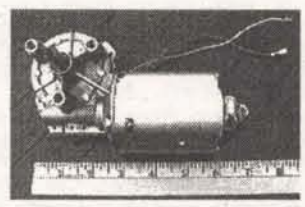

**GEARHEAD MOTORS**. 24V, 35 RPM. Manufacturer rated 900 pounds. $10 plus S&H. Info: 570-735-5053 Details: http://divelec.tripod.com Toll free orders (only) 1-877-679-1865.

**Subscribe to Nuts & Volts 1-800-783-4624 / www.nutsvolts.com**

## Callbacks up here can be a matter of life and death.

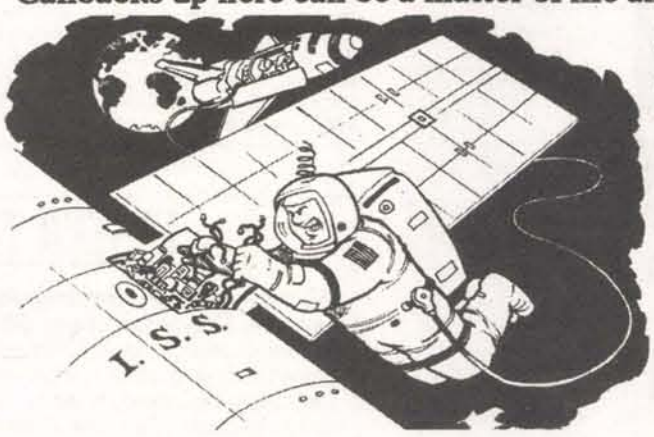

Technicians at NASA's Space Shuttle Logistics use the ***CapAnalyzer 88A*** to be sure equipment is in perfect condition before being launched where service calls could be somewhat of a problem. The ***CapAnalyzer 88A*** is also used by NBC TV, General Motors, Sears Service, Time Warner Communications, Panasonic, Matsushita Industrial, and Pioneer Electronics technicians, as well as thousands of independent TV, computer monitor, VCR and industrial service technicians. They prefer the ***CapAnalyzer 88A*** because it checks electrolytic capacitors for leakage and ESR *in-circuit*, accurately.

Check www.eds-inc.com/88users.html for actual users' comments as they compare their own ***CapAnalyzer*** to the "wizards" and "z-meters" they already own. No unsoldering to check out-of-circuit, no mistaking a shorted or leaky cap as good, as other "ESR" meters do, no guessing about whether a value is good or bad. With the exclusive three-color comparison chart right on the front panel, auto-discharge, multi-beep alert, and one-handed tweezer test probe, even your grandmother could find defective caps in that problem PWM power supply, TV, computer monitor, VCR, or industrial control board in just seconds. And because it's handheld you can service anything anywhere. It's no wonder that almost 60% of ***CapAnalyzer*** sales are by referrals, or service managers buying additional units. In fact, our distributors tell us it's the most asked-for-by-name piece of test equipment they sell.

So stop wasting time and come back down to Earth. You can have your own ***CapAnalyzer 88A*** for only **$179**. With our exclusive 60-day satisfaction-or-money-back guarantee, you risk nothing. Prepare to be amazed: your only problem will be running out of work as you take care of all of those "dogs" that you've been sitting on. We're **Electronic Design Specialists**. We make test equipment designed to make you money. Check out **www.eds-inc.com** for all of the details. Available worldwide, at your distributor now, or call **561-487-6103.** (And thanks to all our customers for making us #1! -Dave)

www.PRIMECELL.com

IF YOU NEED NEW BATTERIES FOR YOUR ELECTRONIC EQUIPMENT
DON'T PITCH EM' - SEND THEM FOR REBUILDING ! - SAVE $ $

- WE INSTALL NEW NI-CAD OR NI-MH BATTERIES INTO YOUR CASE.
- WE IMPROVE PERFORMANCE TO BETTER THAN ORIGINAL.
- WE FIX WHAT CAN'T BE FOUND. ( OR AFFORDED )
- WE PROVIDE QUICK SERVICE. / EXTEND LIFE OF OLDER EQUIPMENT
- WE OFFER FREE QUOTES. / FREE RETURN IF QUOTE IS REFUSED.
- WE PROPERLY DISPOSE OF YOUR OLD CELLS BY RECYCLING.
- WE GIVE YOU A 12 MONTH WARRANTY.
- WE WILL BE HERE WHEN YOU NEED US / EST. 1986
- WE SAVE YOU **** M O N E Y **** $ $ $ $

WE SERVICE RECHARGEABLE BATTERY ASSEMBLIES FOR ALL TYPES OF ELECTRONICS.
RADIOS, SCANNERS, CORDLESS TOOLS, BAR CODE READERS, GPS, SCIENTIFIC, SURVEILLANCE

| GENERAL ELECTRIC | | UNIDEN | | RADIO SHACK | |
|---|---|---|---|---|---|
| MPD PLS MPA 4850P | $ 34.50 | APX650 1050 1105 | $ 32.50 | HTX 202/404 | $ 22.50 |
| MPD PLS MPA 4860P | $ 39.50 | 1010 1070 1100 | $ 32.50 | NEW NiMh HTX pack | |
| MPR MPS MPX 763/777 | $ 39.50 | 1120 1200 Series | $ 32.50 | 8.4V 1650mAh | $ 39.50 |
| MONOGRAM 4506P1/3 | $ 37.50 | BP2500 650mAh | $ 19.50 | KENWOOD | |
| MAXON SA-1155 1160 | $ 39.95 | BP205 1600mAh | $ 22.50 | PB2/6/33/34 | $ 28.50 |
| MOTOROLA | | ICOM | | PB7/8/9/13/14/18 | $ 34.50 |
| MX300 HT600 MT1000 STX | | BP2 / BP3 /BP22 | $ 19.50 | KNB6/7/12/14/15 | $ 34.50 |
| NTN 4585 4824 5414 | $ 37.50 | BP5 / BP23 / 24 | $ 27.50 | PB10/25/26/32 | $ 24.50 |
| NTN 5447 5521 5545 | $ 37.50 | BP7 / CM7/ BP8 | $ 34.50 | CORDLESS DRILLS | |
| NLN 5860 NTN 4327 | $ 39.50 | BP157/174/180 | $ 34.50 | 50% MORE CAPACITY. | |
| MIDLAND | | CM140/141/166 | $ 41.50 | Any brand 7.2V | $ 21.50 |
| 70-B10 B16 B19 B21 | $ 39.95 | YAESU | | Any brand 9.6V | $ 29.50 |
| B25 B26 B32 B36 B60 | $ 39.95 | FNB 3 4 12 14 16 | $ 32.95 | Any brand 12.0V | $ 36.60 |
| | | FNB19 21 26 27 38 | $ 32.95 | Any brand 14.4V | $ 39.50 |
| | | FNB 10 1117 25 35 | $ 23.95 | Any brand 18.0V | $ 44.50 |

See our web pages about rebuilding battery packs used for Land Surveying.

BATTERY REBUILD SERVICE

FOR INFORMATION ABOUT YOUR REQUIREMENTS ... CONTACT US:
USE THE EASY INFO. REQUEST PAGE AT http://www.primecell.com
PHONE OR FAX : (814) 623-7000 E-MAIL TO: sales@primecell.com
SEND PACKS FOR FREE QUOTATION BY: UPS, FEDEX, OR US MAIL

CUNARD ASSOCIATES INC., 9343 US RT 220, Bedford, PA 15522

Write in 46 on Reader Service Card.

8+ HOURS

DIGITAL
TELEPHONE
RECORDING DEVICE

Voice activated, starts with phone pick up, stops with hang up.

*World's Smallest* - battery operated, extremely reliable, no moving parts, no tape to flip.

Records both sides of conversations which transfer easily to a PC.

Ready to operate with software & accessories included.

Only $245 + $6.95 S/H
ORDER TODAY!

bugged.com

5075 Park Boulevard
Pinellas Park, FL 33781

1 877 WIRE TAP

Actual Size
4" Tall 1.4" Wide .75" Thick

Write in 47 on Reader Service Card.


## PLANS — KITS — SCHEMATICS

**ROBOTS WANTED**: Dead or alive, whole or parts. Marvin (Iowa Precision), Gemini, RoPet, Hubot, RB5X, Newton SynPet, ComroTot, ELAMI, ITSABOX, HeathKit (HERO JR, 1, 2000, or Arm Trainer), Androbots (TOPO, BOB, Fred, and Androman), Rhino, Maxx Steele, Omnibots, etc. Also looking for robot prototypes, options, and literature, will pay cash. Please E-Mail rdoerr@bizserve.com Call 810-777-1313 or write to: Robert Doerr, 26308 Cubberness, St. Clair Shores, MI 48081.

**ARobot KIT** from Arrick Robotics uses the BASIC Stamp II. Quality metal construction. Easy to assemble and very expandable. $235. http://www.robotics.com/arobot

**TEST EQUIPMENT** kits. If you liked Heathkit, you will love Technology Systems, 4 Prospect Pl., Torrington, CT 06790.

**HIGH VOLTAGE EXPERIMENTERS!** Hot, thick, sparks from automobile ignition coil 120VAC driver. Simple, easy-to-build circuit, non-critical parts. Perfect for Jacobs Ladder, HV supply. For plans send $5 to: D. LeFevre, 6675 Furnace Road, Ontario, NY 14519-8921.

**SMART CARD** applications CD-ROM $50. Blank smart cards $20 or 8/$100. Tony 419-385-3100.

**PCB Milling**

**CIRCUIT BOARDS**. Low-cost, precision-made PC boards from your CAD program files (no photoplots required). Single and double-sided with contour routing. Ideal for RF/analog/digital prototypes. Full details at http://www.pcbmilling.com E-Mail: feedback@pcbmilling.com FAX: 703-818-0071.

**200+ ELECTRONIC** PROJECTS. Secure WEB ordering @ www.matcopublishing.com/plans1.htm or send $1 (refundable) for catalog. MATCO-5A, POB 509, Roseville, MI 48066-0509.

**ELECTRONIC KITS**. Amplifier, internet broadcaster, fiber optic, transmitters, radio, security, voice changer. Check our website for monthly specials. Call J-Tron 1-888-595-8766, www.j-tron.com

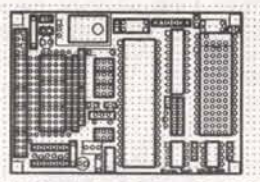

**PIC SINGLEBOARD COMPUTER** with large RAM, quickbuild protoboards, pocket testbench, PIC monitor chips. Oricom Technologies, www.sni.net/~oricom

## MANUALS — SCHEMATICS WANTED

## MISCELLANEOUS ELECTRONICS FOR SALE

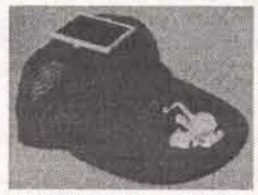

**SOLAR-POWERED FAN HAT.** Baseball type hat with solar powered fan. Great for sports fans, golfers, etc. Available in red or blue. $19 plus $2.00 shipping. CA residents add 7.75% sales tax. Visa/MC/Disc/Amex OK. H.T. Orr Computer Supplies, 249 Juanita Way, Placentia, CA 92670. 714-528-9822, 1-800-377-2023, FAX 714-993-6216.

**NUCLEAR ELECTRONICS** (NIM, CAMAC), PMTs, optics, high vacuum, and high voltage components and equipment. Guaranteed quality at reasonable cost. OE Technologies, Box 703, La Madera, NM 87539. Ph: 505-583-2482, Fax: 505-583-9190, E-Mail: oetech@newmexico.com http://www.oetech.com

**HIGH QUALITY TOOLS AND STAINLESS STEEL HARDWARE. European and American screwdrivers, nutdrivers, pliers, hexkeys, balldrivers, and more! Wiha, Bondhus, and Knipex. Stainless cap screws, machine screws, nuts, washers, U-bolts, and eyes. Free catalog. Robert Mink Import-Export, Box 6437V, Fair Haven, NJ 07704. Telephone or fax 732-758-8388. E-Mail: w2tv@compuserve.com**

**FREE FLYER** on DBS, cable TV, phones, credit cards, schematics, health items. Bill 1-800-879-9657.

*Continued on page 75*


ACP'S 100th GIANT COMPUTER SWAP★MEET

Orange County's Original!

All Day Sunday 8am-2pm

Nov 26th

Be a Seller ...for your space Call Julie

FREE Admission & Parking
Shop 100's of Sellers

in ACP's Giant Parking Lot !!!

Advanced Computer Products, Inc.

ACP SUPER★STORE

Since 1976

1310 E. Edinger
Santa Ana, CA
714-558-8813
www.acpsuperstore.com

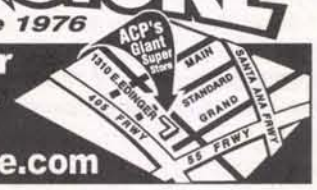


FASTER THAN MOTOROLA

**Two-way radio jamming equipment 800/900MHz.** Stop illegal surveillance. **Pager jammers 900MHz.** Stop pagers from going off during school or church service. **Cellular phone jammers.** Stop cellulars from going off during school or church service. **PCS jamming, PCS phones. Lojack/**teletrack/boomerang. Stop illegal tracing/anti-surveillance. Cordless phone jammers 49MHz/900MHz • Radar jammers Xband • Nextel jammers • Car alarm jammer • CB radio jammer • Garage door jammer • RC radio jammers • AM/FM radio • HF/VHF/UHF radios • 1/8000MHz jamming equipment.

**This equipment is designed for anti-surveillance customers: embassies, schools, churches, governments, law enforcement.**

IF YOU DON'T SEE WHAT YOU WANT, WE WILL BUILD IT FOR YOU!!

*We sell only to specific organizations or for export. Anyone implying illegal activity will be denied assistance and will be reported to law enforcement.*

Jam RF • 954-561-8128 or www.jamrf.com

dealer directory dealer directory dealer directory

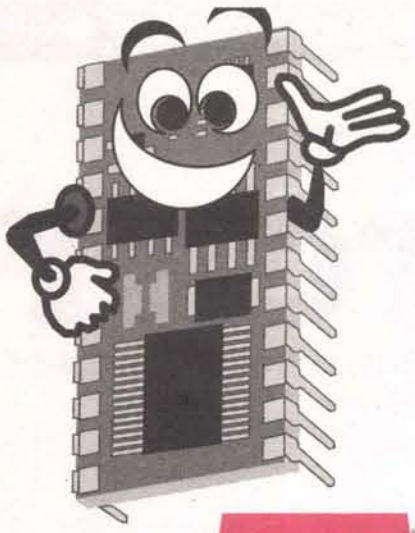

by Jon Williams

# Stamp Applications

## A STAMP-II ISD SOUND LAB

**Putting the Spotlight on BASIC Stamp Projects, Hints, and Tips**

I love "talking" projects. I really do. While I still wish that a semiconductor company would come along and resurrect the SP0256-AL2 allophone synthesizer, I'm not holding my breath. So, last month I used the ISD2560 ChipCorder® to create a talking-pet trainer. The ISD25xx chips are incredibly popular and they can be found in a very wide range of industrial and consumer products.

"Well ..." I thought, after playing with the pet trainer, "I guess I'd better crack open the docs and really dig in."

The pet trainer used the ISD in its simplest mode, called "Push-Button." This mode is generally intended for stand-alone applications. We used the Stamp to push the buttons and make the device train our pet.

With a little more work and some more connections, we can make the ISD25xx do all sorts of neat things. Let's give it a try.

### ISD2560 Basics

For this month's project, we'll use the ISD2560. This is the most popular of the series because it has the best overall sound quality. The ISD2560 can store up to 60 seconds of sound in a unique type of patented, non-volatile memory. This means you can remove power from the device without losing your recordings. The chip's PD pin puts it into a very low power state (when not operating), making battery-operation viable.

After a sound segment is recorded in the ISD2560, an End-Of-Message (EOM) marker is left in memory. When recording multiple messages, the next recording starts at the address following the EOM. Addressing individual recordings stored in the ISD can be accomplished two ways: indirectly (message cueing) by knowing the message number and directly by knowing the starting address of the message. Once the device starts playing, all we have to do is watch for a low-going pulse on the EOM line to know when the message is complete.

... which is easier said than done in message cueing mode. When we set up for message cueing (details later), the chip actually scans through memory (looking for EOM markers so it can skip messages) at 800 times its normal speed. What this means is that the EOM pulse could be as short as 11 microseconds! That's not much of a pulse. Thankfully, we can use a little PBASIC trick to catch it. We'll get into more ISD details as we analyze the lab code.

### Our Lab And The Software That Drives It

Since the idea behind this project is experimenting, I assembled mine on a solderless breadboard. What you'll immediately notice about this project is that it uses all of the Stamp's I/O lines. Don't fear, we're only doing this now to make experimenting easy. If you find you want a more permanent solution, you can tie address lines together (i.e., Push-Button mode) or use shift registers to set the ISD's address lines. More on that later.

The software for our lab is called ISD_LAB.BS2. Since this program is designed to be interactive (modified and re-run), you should make a back-up copy to recover from a potential accident.

There are five modes to the program: record, sequential playback, play a message using cueing, play a message at a specific address, and play a message at an address for a specified number of milliseconds (something less than the recorded message length). You control the program's behavior by changing the Mode constant.

Initialization of the Stamp is pretty straightforward and yet, I want to make an important point about the order in which things are done. You'll notice in the code that the Stamp's output lines are

**Figure 1**

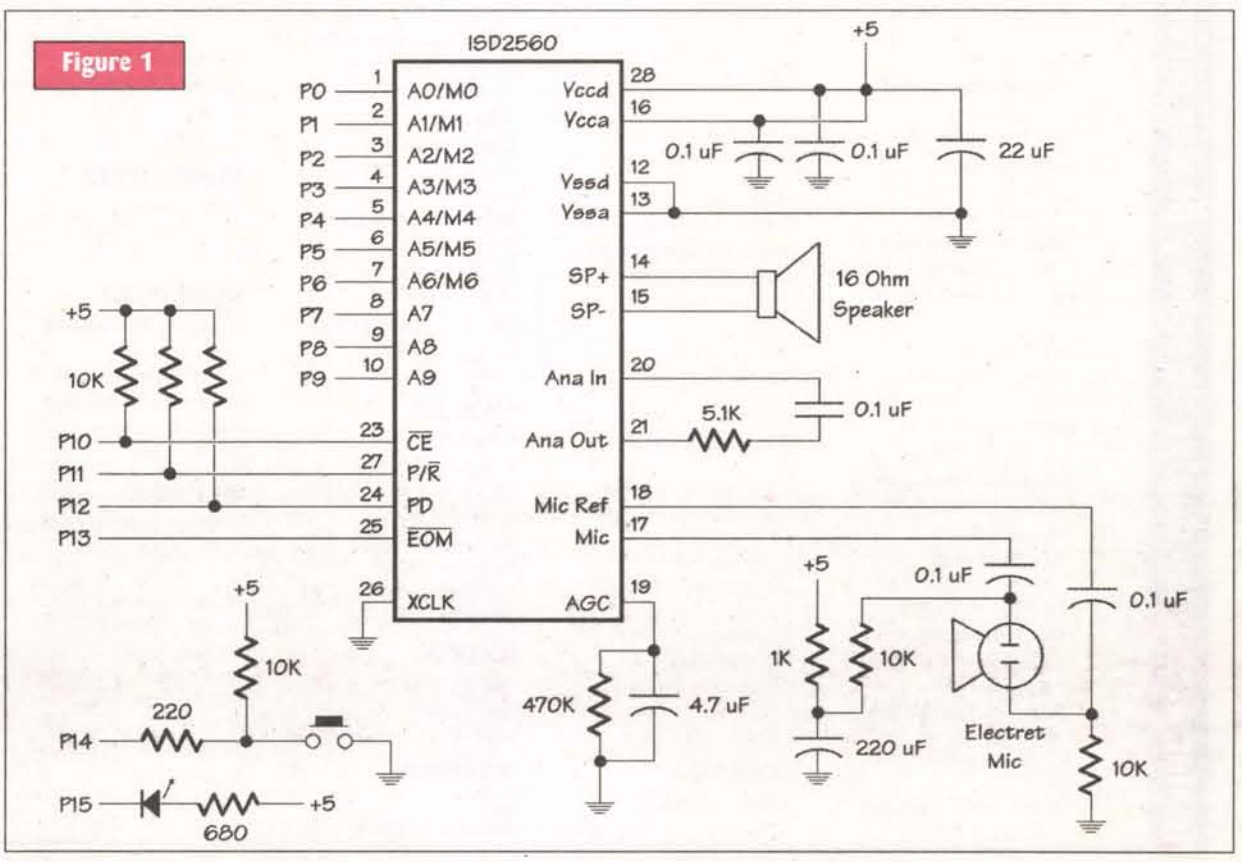

# A STAMP-II ISD SOUND LAB

set up before they're actually defined as outputs. There is a reason.

The Stamp initializes all variables to zero, including outputs and direction registers (defaulting them to inputs). Since the CE pin of the ISD wants a high-to-low transition, we put a 10K pull-up on it – that way we have to force it to go low. During the initialization sequence, the CE control pin is set to 1 so that it will go high when that pin is defined as an output.

Don't change this sequence. If you set the CE pin as an output before making its value 1, you'll get a glitch recording at the beginning of your ISD's memory. Go ahead; ask me how I know this. Yes, I chased that bug for a day. It's a good lesson. Always define the value of your output pins before setting them to outputs.

Moving on, the program resets the ISD by pulling the PD line high for 13 milliseconds. After the PD line goes low, you must wait for 25 milliseconds before initiating any record or play cycle. You'll see that sprinkled through the code.

After basic initialization and checking to see that the button is not stuck, the program BRANCHes to the section dictated by Mode. Since the first thing we need to do is record some messages, let's go there first. We set the Mode constant to MRec (0).

To record messages into the ISD, we'll use Push-Button mode, just like the pet trainer did. The difference is that we won't reset the ISD address after each recording. This way we can record any number of messages, one after the other, up to the limit of memory.

To go into Push-Button mode, we need to set the ISD's A6, A8, and A9 lines high. On the ISD, address lines zero through six are also defined as operational mode inputs. The mode inputs are active when both A8 and A9 are high. If either A8 or A9 is low, the mode inputs are treated as part of a message address.

We start by clearing any old mode bits, setting opMode to six, and calling the SetModeBit subroutine. This routine uses the DCD operator to set the correct bit. It also takes care of A8 and A9. Notice too, that it adds the new opMode bit (old bits aren't cleared). The reason for this is that some of the ISD operational modes can work together. By changing opMode and calling SetModeBit again, we can set multiple bits.

With Push-Button mode set p, we set the PR (play/record) control line to record mode by bringing it low and then waiting for the button to be pressed. When the button is pressed, the program waits 250 milliseconds (so we can get our voice ready), then starts the recording by pulsing the CE line low.

In Push-Button mode, the ISD's EOM line becomes a recording indicator. The program watches for this line to go high and then turns on the LED to indicate it's time to start talking. Recording continues until the button is released. Once the button is released, pulsing the CE line again terminates recording. This causes the ISD to put an End-Of-Message marker after our recording and advance its memory pointer to the next available address.

With this message recorded, our program puts the ISD into Play mode (just to be safe), turns off the LED, and loops back to wait for another button press. Note that the ISD is not reset after the recording. This would cause the address pointer to be set to zero and we could only record one message (this is how the pet trainer works).

Now it's time to check our messages. To do this, change the Mode constant to MPSeq (1). The section of code called P_Seq works identically to the Record section. Where it differs is that it puts the ISD into Play (PR high) mode, pulses the CE line, then waits for the EOM line to go low at the end of the message. As in recording, the EOM line acts as an activity


Order Today!

"PROGRAMMING AND CUSTOMIZING THE BASIC STAMP COMPUTER"
by Scott Edwards

Build smart electronics projects with the inexpensive, simple-to-use, surprisingly powerful BASIC Stamp.

ONLY $34.95

As a paid subscriber to *Nuts & Volts*, you'll receive **10%** off the list price!!

*(See ad on page 50 for ordering details and other titles currently available.)*


**Listing 1**

```
' Nuts & Volts - Stamp Applications
' October 2000 (Listing 1)

' -----[ Title ]-----------------------------------------------------------
-
'
' File..... ISD_LAB.BS2
' Purpose... ISD2560 ChipCorder Lab
' Author.... Jon Williams
' E-mail.... jonwms@aol.com
' Started... 04 SEP 2000
' Updated... 08 SEP 2000


' -----[ Program Description ]---------------------------------------------
-
'
' This program facilitates experimenting with the ISD2560 ChipCorder.
'
' Program Modes:
'
' 0 - Record one or more messages to the ISD
' 1 - Play messages, one at a time, in order
' 2 - Play a specific message
' 3 - Play sound clip from specific address - auto stop at EOM
' 4 - Play sound from address for number of milliseconds


' -----[ I/O Definitions ]--------------------------------------------------
-
'
AddrL   VAR     OutL                    ' low bits of ISD address (0..7)
AddrH   VAR     OutC                    ' high bits of ISD address
(8..9)

CE_     CON     10                      ' ISD chip enable
PR      CON     11                      ' ISD play/record (play = 1)
PD      CON     12                      ' ISD power down (reset = 1)
EOM_    VAR     In13                    ' ISD end of message indicator
EOMpin  CON     13                      ' EOM pin number

BtnIn   VAR     In14                    ' button input
LED_    CON     15                      ' LED output (active low)


' -----[ Constants ]-------------------------------------------------------
'
MaxAddr CON     599                     ' last address in ISD25xx

MRec    CON     0                       ' record
MPSeq   CON     1                       ' play back messages in order
MPMsg   CON     2                       ' play specific message
MPAddr  CON     3                       ' play sound from address
MPTime  CON     4                       ' play for n milliseconds

Mode    CON      MPSeq                  ' default to sequential play


' -----[ Variables ]-------------------------------------------------------
-
'
btn     VAR     Bit                     ' pushbutton input
x       VAR     Byte                    ' loop counter
msgNum  VAR     Byte                    ' message number
msgAddr VAR     Word                    ' clip segment address (0 - 599)
msgLen  VAR     Word                    ' clip length in milliseconds
waste   VAR     Word                    ' workspace for PULSIN
opMode  VAR     Nib                     ' for use with SetModeBit
cntr    VAR     Byte                    ' loop counter


' -----[ Initialization ]--------------------------------------------------
-
'
Init_IO_Pins:
  AddrL = %00000000                     ' clear message address bus
  AddrH = %1100                         ' play, CE_ high, clear A9 & A8

  DirL = %11111111                      ' low bits of address
  DirC = %1111                          ' PR, CE_, A9, A8
  DirD = %1001                          ' LED_, Btn, EOM_, PD

ISD_Setup:
  GOSUB ResetISD
  PAUSE 25                              ' let ISD settle (Tpud)

LED_Off:
  HIGH LED_


' -----[ Main Code ]-------------------------------------------------------
-
'
Main:
  GOSUB GetBtn
  IF btn = 1 THEN Main                  ' wait for release

CheckMode:
  BRANCH Mode,[Record,P_Seq,P_Msg,P_Addr,P_Time]
  GOTO Main
```

# A STAMP-II ISD SOUND LAB

indicator when the ISD is in Push-Button mode. Each press of the button will cause another message to play until the end of memory is reached.

Playing messages in order is fun, but not always useful. Wouldn't it be nice if we could play any message or a sequence of messages in any order? We can. The ISD has an operational mode called message cueing (M0). What this mode does is fast forward through its memory to the desired message.

To test message cueing, you need to set the Mode constant to MPMsg (2) and re-run the program. The demo code at P_Msg will take the first five messages in the ISD and play them backward. Cueing messages in the ISD is a bit tricky, so I put together a subroutine to handle the details.

Take a look at the subroutine called PlayMessage — this is the code that does the fast forwarding for us. This code resets the ISD then puts it into cueing mode by setting A0 and A4. This allows cueing and consecutive messaging. To enable the mode bits, we must also set A8 and A9. With everything set up, we have to wait 25 milliseconds before proceeding.

The first thing the routine does is check to see if the message number is zero or one. (I decided that the first message in memory is message number 1 — you could modify the code to make the first message number 0 without any difficulty.) If the message number is zero or one, the cueing operation is skipped and the first message in the ISD is played.

Let's assume it's not message one and see how the cueing operation works. Remember that with cueing set, the ISD scans through its memory at 800 times its normal rate. What this means is that the EOM pulse could be as short as 11 microseconds. That's too short for our normal polling loop to catch.

Luckily, PBASIC provides a work-around. What we do is use PULSIN to watch for the EOM pulse. Since PULSIN can measure a pulse down to two microseconds, we're in luck. To skip to a message, we're going to pulse the CE line and watch for the EOM one less time than the value of our message number. Once we've done all this skipping, the ISD address pointer is set to the desired message. To play the message, we must clear the cueing bit (A0) and then proceed as we have before. Once the EOM line pulses low, we know the message is done playing and we can return to the program.

You can create complex phrases playing messages in the order you choose. The only thing you need to know is the message number.

The last two modes of the demo start playback of a sound segment from a specific address in the ISD. These modes are similar in that they reset the ISD, set up the message address, wait for the device to settle (25 ms delay), then pulse the CE line low to start playback. Since the ISD25xx chips have 600 memory cells, addresses are limited to 599.

With Mode set to MPAddr (3), playback is automatically terminated when the EOM marker is reached. When Mode is set to MPTime (4), playback is manually terminated after waiting a specified number of milliseconds (set in msgLen) by taking the PD line high, resetting the ISD. The neat thing about MPTime mode is that we can actually parse individual sound segments out of one long recorded message. It takes some work though; we have to find the address and the length of our clip. We'll give that a try in the next program.

### Resources:

**Jon Williams**
3718 Valley View Lane, #3040
Irving, TX 75062
**(972) 659-9090**
**jonwms@aol.com**

**Parallax**
599 Menlo Drive, Suite 100
Rocklin, CA 95756
**(888) 512-1024**
**www.parallaxinc.com**

**ISD25xxx Documentation**
www.isd.com

**Quadravox**
www.quadravox.com

## Talking Numbers

Listing 2 is the code for a program that demonstrates a couple of the routines we just developed. What this program does is generate random numbers, then says them aloud. The number is also displayed on a DEBUG terminal. There are two elements of this program: one that calls out the

```
' ===============
' Record messages
' ===============

Record:
  AddrL = 0                          ' clear old mode bits
  opMode = 6
  GOSUB SetModeBit                   ' record in pushbutton mode
  LOW PR                             ' record mode

R_Hold:
  GOSUB GetBtn
  IF btn = 0 THEN R_Hold             ' wait for button

  PAUSE 250                          ' time to get voice ready
  PULSOUT CE_,50                     ' initiate recording

R_Wait:
  IF EOM_ = 0 THEN R_Wait            ' wait for recording indicator
  LOW LED_                           ' record LED on

R_Loop:
  GOSUB GetBtn
  IF btn = 1 THEN R_Loop             ' record until button release
  PULSOUT CE_,50                     ' mark end of message
  HIGH PR                            ' back to play (for safety)
  GOTO LED_off                       ' clear LED

' ======================
' Play messages in order
' ======================

P_Seq:
  AddrL = 0                          ' clear old mode bits
  opMode = 6
  GOSUB SetModeBit                   ' play with pushbutton mode

PS_Hold:
  GOSUB GetBtn
  IF btn = 0 THEN PS_Hold            ' wait for button

  PULSOUT CE_,50                     ' start message
  PAUSE 50                           ' let EOM go HIGH

PS_Wait:
  IF EOM_ = 1 THEN PS_Wait           ' wait for message to end

  GOTO PS_Hold                       ' get ready for next

' ======================
' Play specified message
' ======================

P_Msg:
  GOSUB GetBtn
  IF btn = 0 THEN P_Msg              ' wait for button

  FOR cntr = 5 TO 1                  ' say 5 messages backward
    msgNum = cntr
    GOSUB PlayMessage
  NEXT

  GOTO P_Msg

' ================================
' Play message at specified address
' ================================

P_Addr:
  GOSUB GetBtn
  IF btn = 0 THEN P_Addr             ' wait for button

  msgAddr = 107                      ' set address
  GOSUB PlayClip                     ' play to EOM marker

  GOTO P_Addr

' ==================================
' Play message for specified duration
' ==================================

P_Time:
  GOSUB GetBtn
  IF btn = 0 THEN P_Time             ' wait for button

  msgAddr = 95                       ' set address
  msgLen = 850                       ' set length (milliseconds)
  GOSUB PlayLength                   ' play for specific length

  GOTO P_Time

' -----[ Subroutines ]-----------------------------------------------------
'
ResetISD:
  HIGH PD                            ' reset the ISD
  PAUSE 13
  LOW PD
```

# A STAMP-II ISD SOUND LAB

digits of the number and one that says the number as we humans would.

There are a couple of requirements for this program to work, however. First, you have to record the list of digits and numbers into the device using ISD_LAB.BS2 set to Record mode. What you're going to do is press the button, wait for the LED to come on, say a number, then release the button. You want each number in the list stored as an individual message in the ISD.

Here's the complete list:

0, 1, 2, 3, 4, 5, 6, 7, 8, 9
10, 11, 12, 13, 14, 15, 16, 17, 18, 19
20, 30, 40, 50, 60, 70, 80, 90
"hundred"
"thousand"

You need to record the numbers very carefully, making sure not to create any blank messages in between. You can do a quick test by setting the Mode constant in ISD_LAB.BS2 to MPMsg (2), set the msgNum to 30, then running the program. If all went well, you should hear "thousand" come out of the speaker. If you get something else, you need to go back to Record mode and do it all again. Once it's done, it's done — and you'll probably get it on the first go.

Before you load up SAYNUMBR.BS2 though, you have to find the addresses and message lengths of the first 10 digits (0-9). Change the Mode constant to MPTime (4). What you're going to do is experiment with addresses and message lengths, listening for the best results.

The way to do this is to find the address first. I found that "sneaking up" on the address was the easiest way to go. Once you've found the best starting address, work on the message length. Again, I started shorter than I thought I'd need and extended out until the message sounded good.

My numbers won't be exact, but if you speak at an "average" speed, they can get you in the ballpark.

| Clip | Addr | Length |
|---|---|---|
| "zero" | 2 | 550 |
| "one" | 13 | 660 |
| "two" | 25 | 570 |
| "three" | 33 | 680 |
| "four" | 42 | 690 |
| "five" | 52 | 700 |
| "six" | 62 | 750 |
| "seven" | 73 | 830 |
| "eight | 84 | 780 |
| "nine" | 95 | 850 |

Start at zero and work your way through the list. Don't forget to write down your own addresses and clip lengths!

Okay ... now you can load up SAYNMBR.BS2. Don't run it yet though, you need to edit the DATA statements, substituting your clip addresses and lengths for mine. Notice that the clip lengths are stored in 10 millisecond increments. I did this because the PBASIC READ command will only read bytes from EEPROM. By using a resolution of 10 ms, we could have clip lengths of up to 2.55 seconds. This is fine for our single-digit recordings.

Now run the program. Once it's downloaded, you should get a DEBUG screen that tells you to press the button. Go ahead and do it. While the Stamp is waiting for you to press the button, it's continuously calling the RANDOM function to generate a new number. This brings a "human" factor into the randomness. If we didn't do this, the program would give us the same pseudo-random list every time it was run.

When you do press the button, the DEBUG screen will clear and you'll see the message "Saying digits:" followed by five digits. Then, in your own voice, you'll hear the digits called out. Pretty neat, huh?

What I noticed — and you might too — is that I was a little stingy on addresses and clip lengths when I did my earlier analysis. This caused the digit list demo to sound a bit choppy and unnatural. Since the addresses and lengths are stored in DATA statements, you can fine-tune them to get a really great sounding demo. Even though it's not particularly practical in and of itself, I like this demo because it shows how cleanly sound clips can be concatenated with the ISD using the PlayLength subroutine. Yes, it takes some work, but I think it's worth it.

And keep in mind that PlayLength (with proper analysis, of course) can be used to break a single long clip into shorter fragments, reducing redundant recordings. Perhaps you want to be able to play one long segment, but also a single word or phrase from it. By locating the address and length of the word or phrase, you don't have to record it separately. This will save ISD memory space, allowing you to store a greater vocabulary. I'll bet you're already thinking about adding speech to one of your favorite projects, aren't you?

Okay, let's check out the next demo. The DEBUG screen will have cleared by now and prompted you for another button press. This time, you'll get the message: "Saying number:" followed by a number. Then, you hear the number spoken, just like you would if someone asked you to.

This segment of the program demonstrates the strengths and the weaknesses of using the ISD's message cueing mode. The strength of this mode is that we don't have to know the address or length of the message; we only need to know which message to play (starting with 1). The weakness is that clips often have "dead air" (silence) before and after the actual sound. Those silences and the occasional EOM pop become apparent when concatenating messages with cueing mode.

```
  RETURN


' scan and debounce button input
' - button must stay pushed for 25 ms and not change during routine
'
GetBtn:
  btn = 1                               ' assume pressed
  FOR x = 1 TO 5
    btn = btn & ~BtnIn                  ' test input
    PAUSE 5                             ' delay between tests
  NEXT
  RETURN


PlayMessage:                        ' skip to specific message
  GOSUB ResetISD
  AddrL = %00010001                 ' consecutive messages with cueing
  AddrH = %1111                     ' play, CE_ high, enable mode bits
  PAUSE 25                          ' wait Tpud

  IF (msgNum < 2) THEN PM_Play_It       ' play first if 0 or 1

PM_Fast_Forward:
  msgNum = msgNum - 1                   ' don't skip selected message
  FOR x = 1 TO msgNum                   ' fast forward to it
    PULSOUT CE_,3                       ' start FF
    PULSIN EOMpin,0,waste           ' wait for EOM of current message
  NEXT

PM_Play_It:
  AddrL = %00010000                 ' remove cueing bit
  PULSOUT CE_,50                    ' start the message
  PAUSE 50                          ' let EOM set

PM_Wait:
  IF EOM_ = 1 THEN PM_Wait          ' wait for EOM to pulse low
  RETURN


PlayClip:                               ' play until EOM hit
  GOSUB ResetISD
  GOSUB SetAddress                      ' set address of message
  PAUSE 25
  PULSOUT CE_,50                        ' start play
  PAUSE 50                              ' allow EOM to get set

PC_Wait:
  IF EOM_ = 1 THEN PC_Wait              ' wait for EOM to pulse low
  RETURN


PlayLength:                             ' play for msgLen milliseconds
  GOSUB ResetISD
  GOSUB SetAddress                      ' set address of message
  PAUSE 25                              ' wat Tpud
  PULSOUT CE_,50                        ' start play
  PAUSE msgLen                          ' wait for message to end
  HIGH PD                               ' stop
  RETURN


SetAddress:
  msgAddr = msgAddr MAX MaxAddr         ' limit address to chip
  AddrL = msgAddr.LowByte               ' set A0..A7
  AddrH = %1100 | (msgAddr >> 8) ' set play, CE_ high, A8..A9
  RETURN


SetModeBit:
  AddrL = AddrL | (DCD opMode)          ' add operational mode bit
  AddrH = %1111                         ' set play, CE_ high, enable
mode
  RETURN
```

# A STAMP-II ISD SOUND LAB

Let's take a look at the SayNumber code to see how this segment works. First, it checks to see if the number is zero. If it is, we set msgNum to 1 ("zero") and play it. If the number is greater than zero, it is broken down into three sections: thousands, hundreds, and tens/ones. We do this because it's the way we say numbers: "X thousand, Y hundred, Z."

A word-sized variable has 16 bits, so the largest number that will be returned by RANDOM is 65,535. Since the thousands portion and the tens/ones portion will be 99 or less, it makes sense to create a common subroutine to say a number from one to 99. Jump down to the subroutine called SayValueXX.

The first thing that this routine does is make sure that its target variable, tmpVal, is within the range of one to 99. If not, the routine is skipped, "saying" nothing. While this sort of range checking is not strictly necessary, it will save us headaches when we start copying this code to other programs.

Assuming the value is good, it's checked to see if it's less than 20. If this is the case, the code jumps down to the label SV_1TO19. At this point, we simply need to add one to the value (since "zero" is message 1) to get the message number and say it. After that we can return to the caller.

If the target value is greater than 19, we calculate the first message number by dividing the value by 10, then adding 19. This will cause the ISD to say "20," "30," and so on. Now we take tmpVal // 10 to see if there

**Listing 2**

```
' Nuts & Volts - Stamp Applications
' October 2000 (Listing 2)

' -----[ Title ]-----------------------------------------------------------
'

' File..... SAYNUMBR.BS2
' Purpose... Uses an ISD2560 to "say" and number
' Author.... Jon Williams
' E-mail.... jonwms@aol.com
' Started... 07 SEP 2000
' Updated... 08 SEP 2000

' -----[ Program Description ]---------------------------------------------
'

' This program demonstrates ISD message concatenation.  The program has
' two modes:
'
' MSDig (say digits)
' ==================
' In this mode, the individual digits of the random number are played.
' This code demonstrates playing sounds from a specific address for a
' specifiedlength of time.  Digit addresses and durations are stored in
' DATA statements (duration stored in 10 ms increments to fit into Byte).
'
' MSNum (say number)
' ==================
' In this mode, the number is spoken like we would.  This code
' demonstrates cueing.
'
' Requirements
' ============
' For this program to work, you need to use ISD_LAB.BS2 to record the
' list of digits (below) and determine clip timing (in 10 ms units) of
' the digits 0 through 9.
'
' Record this list (as individual clips) to the ISD:
'
'       0, 1, 2, 3, 4, 5, 6, 7, 8, 9
'       10, 11, 12, 13, 14, 15, 16, 17, 18, 19
'       20, 30, 40, 50, 60, 70, 80, 90,
'       "hundred", "thousand"

' -----[ I/O Definitions ]-------------------------------------------------
'

AddrL   VAR     OutL                    ' low bits of ISD address (0..7)
AddrH   VAR     OutC                    ' high bits of ISD address
(8..9)

CE_     CON     10                      ' ISD chip enable
PR      CON     11                      ' ISD play/record (play = 1)
PD      CON     12                      ' ISD power down (reset = 1)
EOM_    VAR     In13                    ' ISD end of message indicator
EOMpin  CON     13

BtnIn   VAR     In14                    ' button input
LED_    CON     15                      ' LED output (active low)

' -----[ Constants ]-------------------------------------------------------
'

MaxAddr CON     599                     ' last address in ISD25xx

MSDig   CON     0                       ' say digits
MSNum   CON     1                       ' say number

' -----[ Variables ]-------------------------------------------------------
'

btn     VAR     Bit                     ' pushbutton input
x       VAR     Byte                    ' loop counter
mode    VAR     Bit                     ' demo mode
msgNum  VAR     Byte                    ' message number
msgAddr VAR     Word                    ' clip segment address (0 - 599)
msgLen  VAR     Word                    ' clip length in milliseconds
waste   VAR     Word                    ' workspace for PULSIN
opMode  VAR     Nib                     ' for use with SetModeBit
randW   VAR     Word                    ' random number
digit   VAR     Byte                    ' work value for saying digits
tmpVal  VAR     Byte                    ' work value for number to
speech

' -----[ EEPROM Data ]-----------------------------------------------------
'

DAddr   DATA    2,13,25,33,42,52,62,73,84,95      ' ISD address ("0" -
"9")
DTime   DATA    55,66,57,68,69,70,75,83,78,85     ' time (10 ms units)

' -----[ Initialization ]--------------------------------------------------
'

Init_IO_Pins:
  AddrL = %00000000                     ' clear message address bus
  AddrH = %1100                         ' play, CE_ high, clear A9 & A8

  DirL = %11111111                      ' low bits of address
  DirC = %1111                          ' PR, CE_, A9, A8
  DirD = %1001                          ' LED_, Btn, EOM_, PD

ISD_Setup:
  GOSUB ResetISD
  PAUSE 25                              ' let ISD settle (Tpud)

LED_Off:
  HIGH LED_

' -----[ Main Code ]-------------------------------------------------------
'

Main:
  GOSUB GetBtn
  IF btn = 1 THEN Main                  ' wait for release

  DEBUG CLS, "Press the button..."

BWait:
  RANDOM randW                          ' generate new random number
  GOSUB GetBtn
  IF btn = 0 THEN BWait                 ' wait for press

  BRANCH Mode,[SayDigits,SayNumber]     ' branch to selected demo
  GOTO Main


' ============================
' Say individual digits
' - use clip address and length
' ============================

SayDigits:
  DEBUG CLS, "Saying digits: ", DEC5 randW, CR

  FOR x = 4 TO 0                        ' say all 5 digits
    digit = randW DIG x                 ' get the digit
    READ (DAddr + digit),msgAddr ' set the ISD digit address
    READ (DTime + digit),msgLen         ' read the length
    msgLen = msgLen * 10        ' set to milliseconds
    GOSUB PlayLength                    ' say the digit
  NEXT

  mode = ~mode                          ' flip mode
  GOTO Main                             ' do it all again


' ==============================
' Say number as we would speak it
' ==============================

SayNumber:

  DEBUG CLS, "Saying number: ", DEC randW, CR
```

# STAMP APPLICATIONS
# A STAMP-II ISD SOUND LAB

are any ones in our value (remember that // returns the remainder of a division). If there is a ones value, the code at SV_1TO19 handles it as I described above. If the result is zero, we're done.

Back to saying our number. The first thing we're going to do is divide our random number, randW, by 1,000. If the result is greater than zero, we'll use SayValueXX to say it and then we'll say "thousand" by playing message 30. Saying the hundreds value works the same except the "hundreds" message is number 29. Finally, we're down to less than 100 and we can just say it. It's really very easy once the process has been broken into parts.

So once again, we've concatenated discrete sound clips into a single message. If you're careful not to leave too much dead space at the beginning and end of your messages, this technique is easy to use and can be quite effective.

## Making It Permanent

You may get the itch — as I have — to build a permanent version of the ISD Lab. The problem is all the Stamp I/O lines that get eaten up. My suggestion is that you use two 74HC595 shift registers — connected in series — to handle all of the address lines (A0..A9), PD (pin 24), and PR (pin 27). The CE and EOM pins should be connected directly to the Stamp.

Of course, the software will need updating, too. If I get enough requests, I'll post my schematic and updated code.

## Oops ...

For those of you that did attempt to build last month's project, you may have run into a little bit of trouble — unless you downloaded the ISD documentation and caught my error. My schematic (Sept. 2000 issue, page 28) shows all of the ISD's address lines tied to ground. This is not correct. For Push-Button mode, pins 7 (A6), 9 (A8), and 10 (A9) should be tied to Vdd (+5). I'm sorry for the error and any headaches it may have caused you.

## Next Time

I seem to be on a sound wave, as it were, and we'll continue with that theme next month. My friend and fellow DPRG member, Robert Jordan, has shown me some really neat tricks with the Stamp's FREQOUT and DTMFOUT commands. I'll be passing them on to you.

Until then, Happy Stamping. **NV**

```
  IF randW = 0 THEN SN_Zero             ' if zero, just say it

  tmpVal = randW / 1000                 ' get 1000s
  IF tmpVal = 0 THEN SN_100s            ' if zero, skip to 100s
  GOSUB SayValueXX                      ' say thousands value
  msgNum = 30
  GOSUB PlayMessage                     ' say "thousand"

SN_100s:
  tmpVal = (randW // 1000) / 100 ' get 100s
  IF tmpVal = 0 THEN SN_10              ' if zero, skip to 10s
  GOSUB SayValueXX                      ' say 100s value
  msgNum = 29
  GOSUB PlayMessage                     ' say "hundred"

SN_10:
  tmpVal = randW // 100                 ' get 10s and 1s
  GOSUB SayValueXX                      ' say value
  GOTO SN_Done

SN_Zero:
  msgNum = 1
  GOSUB PlayMessage                     ' say "zero"

SN_Done:
  mode = ~mode                          ' flip mode
  GOTO Main


' -----[ Subroutines ]------------------------------------------------
-
'
ResetISD:
  HIGH PD                               ' reset the ISD
  PAUSE 13
  LOW PD
  RETURN


' scan and debounce button input
' - button must stay pushed for 25 ms and not change during routine
'
GetBtn:
  btn = 1                               ' assume pressed
  FOR x = 1 TO 5
    btn = btn & ~BtnIn                  ' test input
    PAUSE 5                             ' delay between tests
  NEXT
  RETURN


PlayMessage:                            ' skip to specific message
  GOSUB ResetISD
  AddrL = %00010001                     ' consecutive messages with cue-
ing
  AddrH = %1111                         ' play, CE_ high, enable mode
bits
  PAUSE 25                              ' wait Tpud

  IF (msgNum < 2) THEN PM_Play_It       ' play first if 0 or 1

PM_Fast_Forward:
  msgNum = msgNum - 1                   ' don't skip selected message
  FOR x = 1 TO msgNum                   ' fast forward to it
    PULSOUT CE_,3                       ' start FF
    PULSIN EOMpin,0,waste               ' wait for EOM of current mes-
sage
  NEXT

PM_Play_It:
  AddrL = %00010000                             ' remove cueing bit
  PULSOUT CE_,50                        ' start the message
  PAUSE 50                                      ' let EOM set

PM_Wait:
  IF EOM_ = 1 THEN PM_Wait                      ' wait for EOM to pulse low
  RETURN


PlayClip:                                       ' play until EOM hit
  GOSUB ResetISD
  GOSUB SetAddress                              ' set address of message
  PAUSE 25
  PULSOUT CE_,50                        ' start play
  PAUSE 50                                      ' allow EOM to get set

PC_Wait:
  IF EOM_ = 1 THEN PC_Wait                      ' wait for EOM to pulse low
  RETURN


PlayLength:                                     ' play for msgLen milliseconds
  GOSUB ResetISD
  GOSUB SetAddress                              ' set address of message
  PAUSE 25                                      ' wat Tpud
  PULSOUT CE_,50                        ' start play
  PAUSE msgLen                                  ' wait for message to end
  HIGH PD                                       ' stop
  RETURN


SetAddress:
  msgAddr = msgAddr MAX MaxAddr                 ' limit address to chip
  AddrL = msgAddr.LowByte                       ' set A0..A7
  AddrH = %1100 | (msgAddr >> 8) ' set play, CE_ high, A8..A9
  RETURN


SetModeBit:
  AddrL = AddrL | (DCD opMode)                  ' add operational mode bit
  AddrH = %1111                                 ' set play, CE_ high, enable
mode
  RETURN


' ===============
' Talking Numbers
' ===============
'
' say a value between 1 and 99
'
SayValueXX:
  IF (tmpVal < 1) | (tmpVal > 99) THEN SV_Done

  IF tmpVal < 20 THEN SV_1TO19                  ' skip if less than 20

  msgNum = (tmpVal / 10) + 19                   ' calculate 10s message #
  GOSUB PlayMessage                             ' say 10s
  tmpVal = tmpVal // 10                         ' calculate 1s message #
  IF tmpVal = 0 THEN SV_Done                    ' skip if zero

SV_1TO19:
  msgNum = tmpVal + 1                           ' correct 0-offset
  GOSUB PlayMessage                             ' say 1s

SV_Done:
  RETURN                                        ' all done
```

by Ray Marston

# MISCELLANEOUS '555' CIRCUITS

*In this '555 timer IC' application article, Ray Marston shows a variety of unusual ways of using the IC in applications such as Schmitt triggers, astable gadgets, alarms, and long-period timers.*

The '555' timer is a popular bipolar IC that is specifically designed to generate accurate and stable C-R – defined timing periods, for use in various monostable 'one-shot' pulse generator and astable squarewave generator applications. The '555' IC is, however, very versatile, and this article shows a variety of ways of using it in 'special' or unusual applications.

## SCHMITT TRIGGERS

The 555 can be used as a Schmitt trigger by shorting pins 2 (trigger) and 6 (threshold) together and applying the input signals directly to these points, as shown in the functional diagram and circuit in *Figure 1*. The IC's action is such that (as illustrated by the *Figure 1* input and output waveforms) when the input voltage rises above 2/3 $V_{cc}$, the IC output switches low, and remains there until the input falls below 1/3 $V_{cc}$, at which point, the output switches high and remains there until the input rises above 2/3 $V_{cc}$ again. The difference between these two trigger levels is called the hysteresis value, and equals 1/3 $V_{cc}$ in this case; this large hysteresis value makes the circuit useful in noise/ripple-rejecting signal conditioning applications.

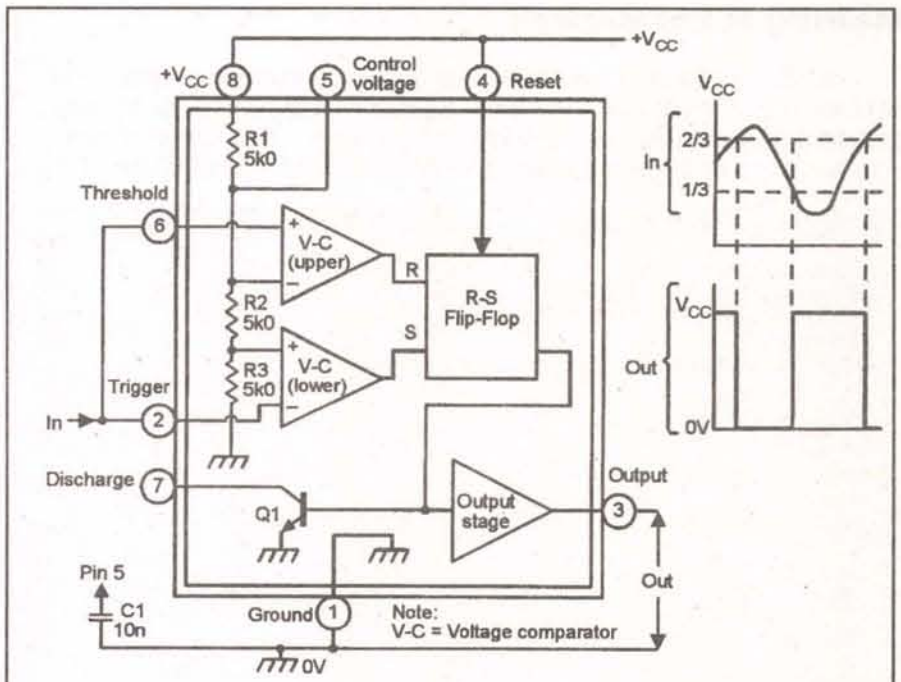


**Figure 1. Functional block diagram (within the double lines) of the 555 timer IC, with external connections for use as a simple but useful Schmitt trigger.**

*Figure 2* shows the basic Schmitt circuit modified for use as a high-performance sine/square converter that can be used at input frequencies up to about 150kHz. Potential divider R1-R2 biases pins 2 and 6 to a quiescent value of 1/2 $V_{cc}$ (i.e., mid-way between the upper and lower trigger values),

**CIRCUIT APPLICATIONS:**

- SCHMITT TRIGGERS
- MORSE CODE PRACTICE OSCILLATORS
- ELECTRONIC DOOR BUZZER
- CONTINUITY TESTER
- SIGNAL INJECTOR
- METRONOME
- LED FLASHERS and ALARMS
- LONG-PERIOD TIMERS


PIC'n Books

LEARN ABOUT PIC MICROCONTROLLERS

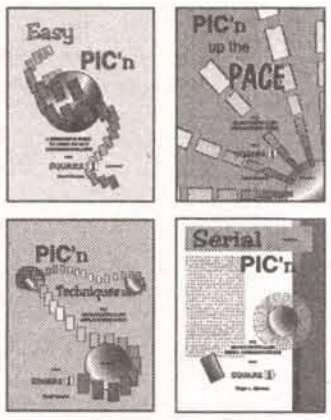


See Table Of Contents: http://www.sq-1.com
Secure Online Ordering Is Available

PIC is a trademark of Microchip Technology Inc.

SQUARE 1 ELECTRONICS

Voice (707) 279-8881 Fax (707) 279-8883

http://www.sq-1.com

TELEPHONE LISTENING DEVICE WITH 12 HR. RECORDER

FCC Approved

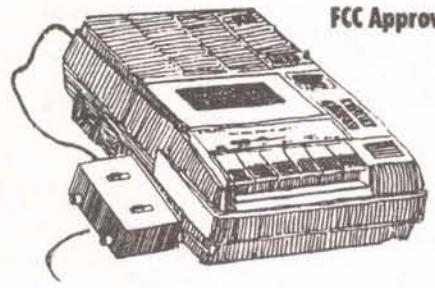

Record telephone conversations in your office or home. Starts automatically when phone is answered, records both sides of phone conversation. Recorder stops when phone is hung up. $99.95 + $7 shipping. For telehone listening device separately $19.95 + $2 ship.

For comprehensive 50 page catalog of Micro Video, VHF transmitters,Surveillance, and Counter-surveillance and much more! Send $3.00

Call 321-725-1000

USI CORP

P.O. Box N2052 Melbourne,FL 32902

COD'S OK

Write in 213 on Reader Service Card.

and the sinewave input is superimposed on this point via C1; square-wave outputs are taken from pin 3. R3 isolates the input signal from the effects of the 555's switching actions. The diagram shows how optional RFI suppression can be obtained via C3.

*Figure 3* shows the 555 used as a minimum-backlash (zero hysteresis) dark-activated relay switch, with light-dependent potential divider RV1-LDR wired to its input terminal. The RV1 and LDR values are roughly equal at the median switching light level. This circuit acts as a fast comparator rather than as a true Schmitt trigger, since pin 6 is tied high via R1, and the light-sensing RV1-LDR potential divider is applied to pin 2 only. Note that this circuit needs good supply decoupling, which is provided via C2.

The above circuit can be made to act as a light (rather than dark) activated switch by transposing the RV1 and LDR positions, as shown in *Figure 4(a)*, or can be made to act as a temperature-activated switch by using an NTC thermistor in place of the LDR, as shown in *Figures 4(b)* and *4(c)*; in all cases, the LDR or thermistor must present a resistance in the range 470R to 10K at the required turn-on level.

## ASTABLE GADGETS

The 555 astable multivibrator is very versatile and can be used in many applications of interest to both the amateur and professional user. *Figures 5* to *11* show examples of typical 555 astable gadgets. *Figure 5* shows a Morse-code practice oscillator, with frequency variable from 300Hz to 3kHz via TONE control RV1. The 'phone volume is variable via RV2, and the 'phones can have any impedance from a few ohms upwards. The circuit draws zero quiescent current when the Morse key is open.

*Figure 6* shows a simple electronic 'door-buzzer' that feeds a monotone signal to a small speaker (25R to 80R) when SW1 is closed; C1 has a low supply-line impedance and ensures adequate output drive capacity.

*Figure 7* shows a continuity tester that generates an audible tone only if the resistance between the test probes is less than a few ohms. The astable operates only if pin 4 is biased above 700mV; normally this pin is grounded via R2, so the astable is off; to operate the astable, the two probes must be shorted together, connecting R2 to the output of the R3-ZD1 voltage-reference generator via RV2. In use, RV2 is trimmed so that astable operation is barely obtained under this condition, and ceases if the inter-probe resistance exceeds a few ohms. Note that the circuit consumes several mA whenever SW1 is closed, even if the probes are open circuit.

*Figure 8* shows a signal injector that is useful for testing both AF and RF circuits. The astable operates at a basic frequency of a few hundred Hz when PB1 is closed; the square output waveform is very rich in harmonics, however, and these can be detected at frequencies up to 10s of MHz on a radio receiver. The signal injection level is variable via RV1.

*Figure 9* shows a metronome in which the 'tick' rate is variable from 30 to 120 beats per minute via RV1, and the volume is variable via RV2. This circuit is a modified version of the standard astable,

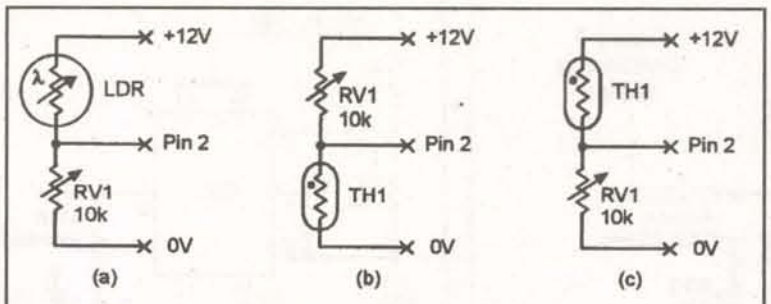


***Figure 4.* Alternative input circuits for *Figure 3*, to give activation by (a) light, (b) under-temperature, and (c) over-temperature.**

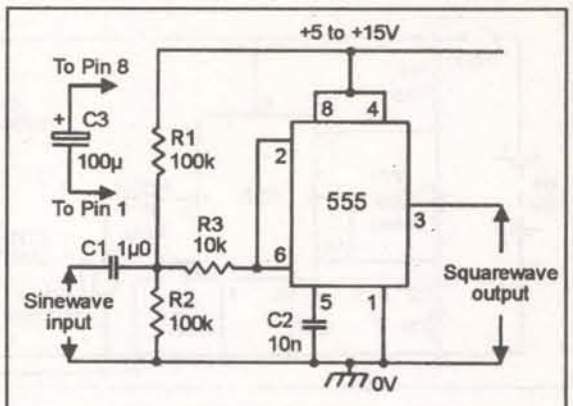


***Figure 2.* 555 Schmitt sine/square converter, with optional RFI suppression via C3.**

***Figure 5.* Code-practice oscillator with variable tone and volume.**

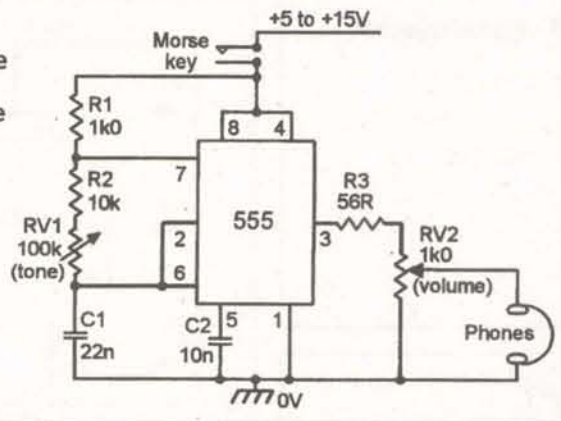


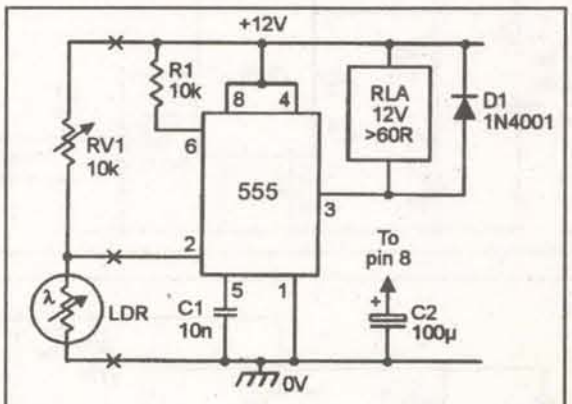


***Figure 3.* Minimum-backlash dark-activated relay switch.**

***Figure 6.* Electronic 'door-buzzer.'**

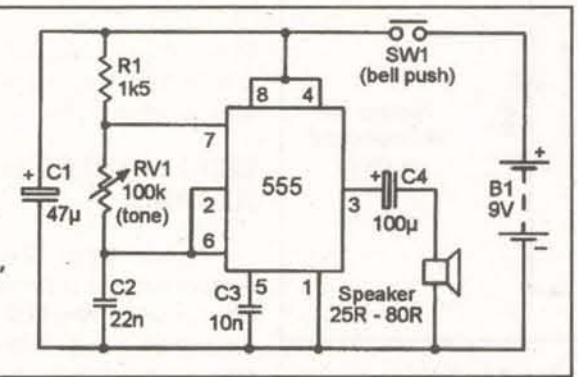



Honey, I shrunk the COMPUTER!

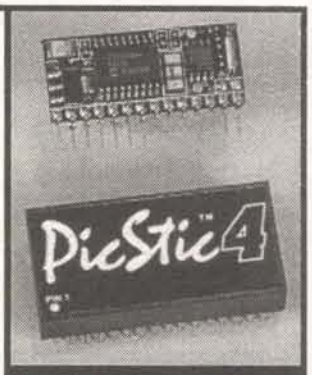


PicStics are like BASIC Stamps® on steroids. They have more speed, more parallel I/O, more code and data space, and more neat features like a real-time clock, 12-bit ADC, and 12-bit DAC.

As low as $29

Call for a catalog or visit our Web site today.

www.micromint.com

(800) 635-3355
(407) 262-0066

Micromint, Inc
740 Florida Central Pkwy., Longwood, FL 32750

BASIC Stamp is a registered trademark of Parallax, Inc.

Write in 217 on Reader Service Card.

World Passing You By?

Are you interested in Microprocessors & Embedded Control Systems? If not you should be! Look around, just about everything these days has an embedded microprocessor in it. TVs, cars, radios, traffic lights & even toys have embedded computers controlling their actions. The Primer Trainer is the tool that can not only teach you how these devices operate but give you the opportunity to program these types of systems yourself. Examples & exercises in the Self Instruction manual take you from writing simple programs to controlling motors. Start out in Machine language, then move on to Assembler, & then continue on with optional C, Basic, or Forth Compilers. So don't be left behind; this is information you need to know!

Examples Include:

- Measuring Temperature
- Using a Photocell to Detect Light Levels
- Making a Waveform Generator
- Constructing a Capacitance Meter
- Motor Speed Control Using Back EMF
- Interfacing and Controlling Stepper Motors
- Scanning Keypads and Writing to LCD/LED Displays
- Bus Interfacing an 8255 PPI
- Using the Primer as an EPROM Programmer
- DTMF Autodialer & Remote Controller (New!)

The PRIMER is only $119.95 in kit form. The PRIMER Assembled & Tested is $169.95. This trainer can be used stand alone via the keypad and display or connected to a PC with the optional upgrade ($49.95). The Upgrade includes: an RS232 serial port & cable, 32K of battery backed RAM, & Assembler/Terminal software. Please add $5.00 for shipping within the U.S. Picture shown with upgrade option and optional heavy-duty keypad ($29.95) installed. Satisfaction guaranteed.

EMAC, inc.
11 EMAC WAY, CARBONDALE, IL 62901
618-529-4525 Fax 457-0110 BBS 529-5708
World Wide Web: http://www.emacinc.com

1985 - 1998 OVER 12 YEARS OF SERVICE

Write in 215 on Reader Service Card.

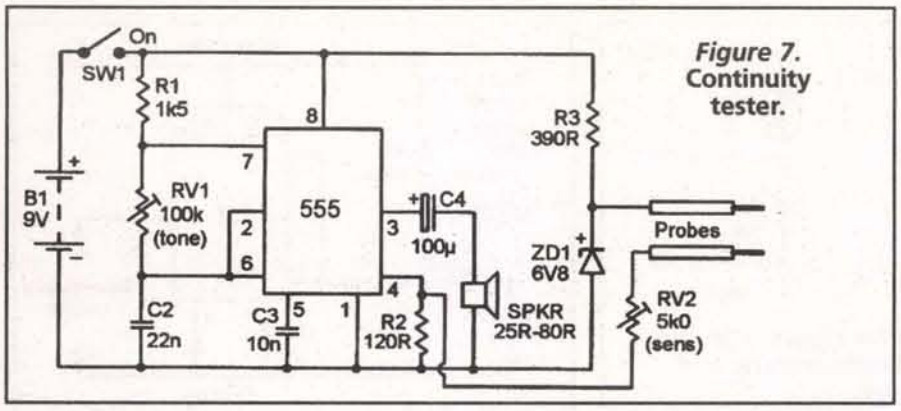


*Figure 7.* **Continuity tester.**

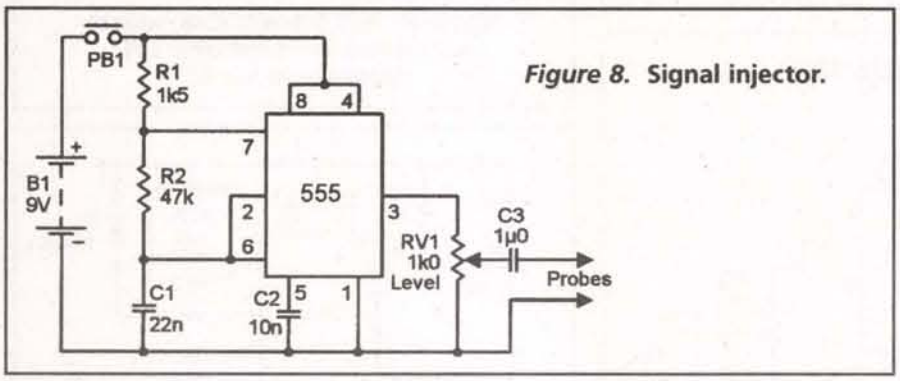


*Figure 8.* **Signal injector.**

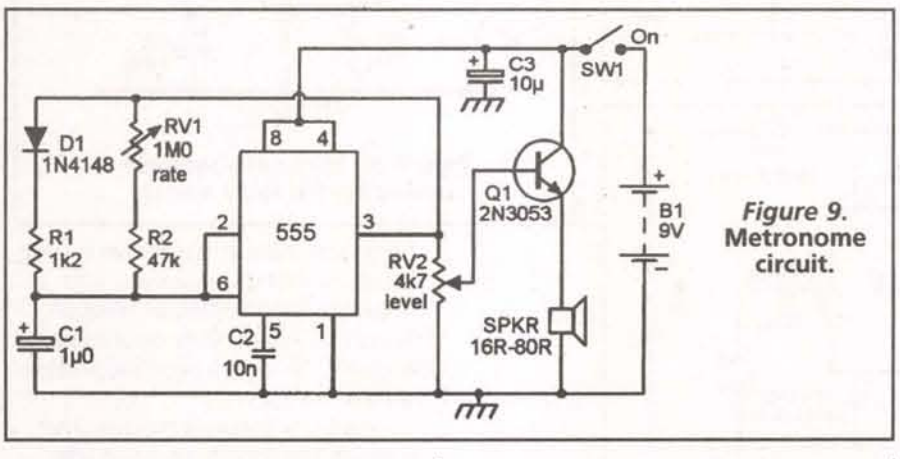


*Figure 9.* **Metronome circuit.**

with its main timing network driven from the IC's pin 3 output. When the output switches high, C1 charges rapidly via D1-R1 to generate a brief (a few mS) 'tick' pulse. When the output switches low again, C1 discharges via RV1-R2, producing an 'off' period of up to 2s (= 30 beats/minute). The output pulses are fed to a small speaker via volume control RV2 and buffer Q1.

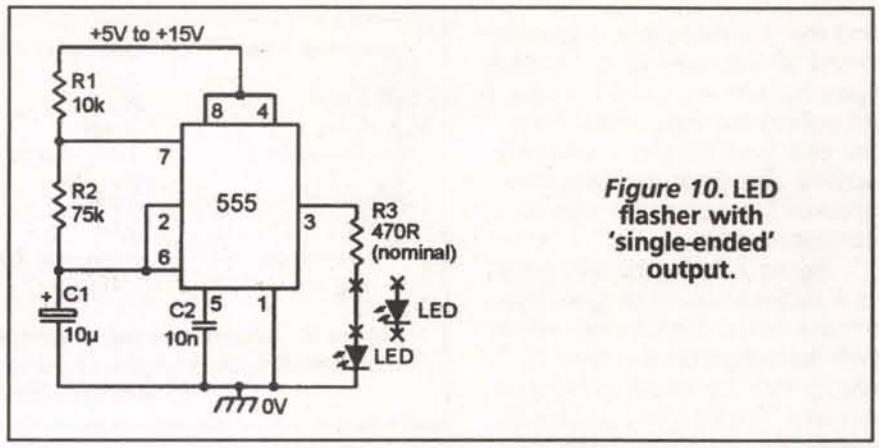


*Figure 10.* **LED flasher with 'single-ended' output.**

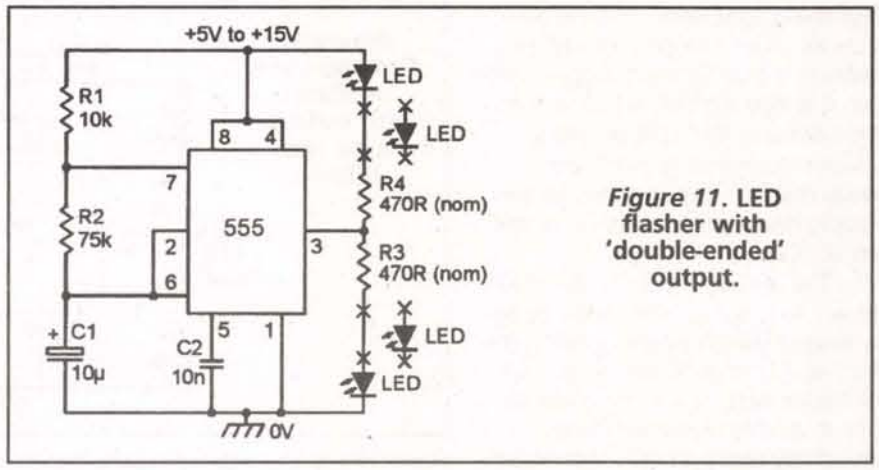


*Figure 11.* **LED flasher with 'double-ended' output.**

## LED FLASHERS and ALARMS

*Figures 10* to *12* show the 555 astable used in LED flasher applications in which the LEDs have equal on and off times. With the component values shown, the circuits each operate at about one flash per second. The *Figure 10* circuit has a 'single ended' output. Either a single LED or a chain of series-wired LEDs can be put between the IC's output and ground, and all LEDs turn on or off together; R3 sets the ON current of the LEDs. Most LEDs drop about 2V when on, so several LEDs can be series-wired in a circuit that is powered from a 15V supply.

*Figure 11* is similar to the above, but has a 'double-ended' output connection in which all 'upper' LEDs are on when the 'lower' ones are off, and vice versa. R3 sets the ON currents of the lower LEDs and R4 sets that of the upper ones.

*Figure 12* shows the basic *Figure 10* flasher circuit modified to give automatic dark-activated operation. R4-R5-LDR-RV1 are used as a light-sensitive Wheatstone bridge that is used to activate the 555 astable via balance-detector Q1 and the pin 4 RESET pin of the IC. Under bright conditions, the LDR has a low resistance, so the Q1 base-emitter junction is reverse-biased and less than 700mV appear on pin 4, so the astable is off. But under dark conditions, the LDR resistance is high and Q1 is biased on, generating more than 700mV on pin 4 and turning the astable on. The LDR must give a resistance in the range 470R to 10K at the dark turn-on level, and RV1 is adjusted so that the astable just activates under this condition.

The above technique gives precision gating and can be used to auto-activate a variety of other 555 astable circuits, to make various audible alarms and relay pulsers, etc. By transposing the LDR and RV1 positions or replacing the LDR with an NTC thermistor, these circuits can be made to auto-active when light or temperature levels go


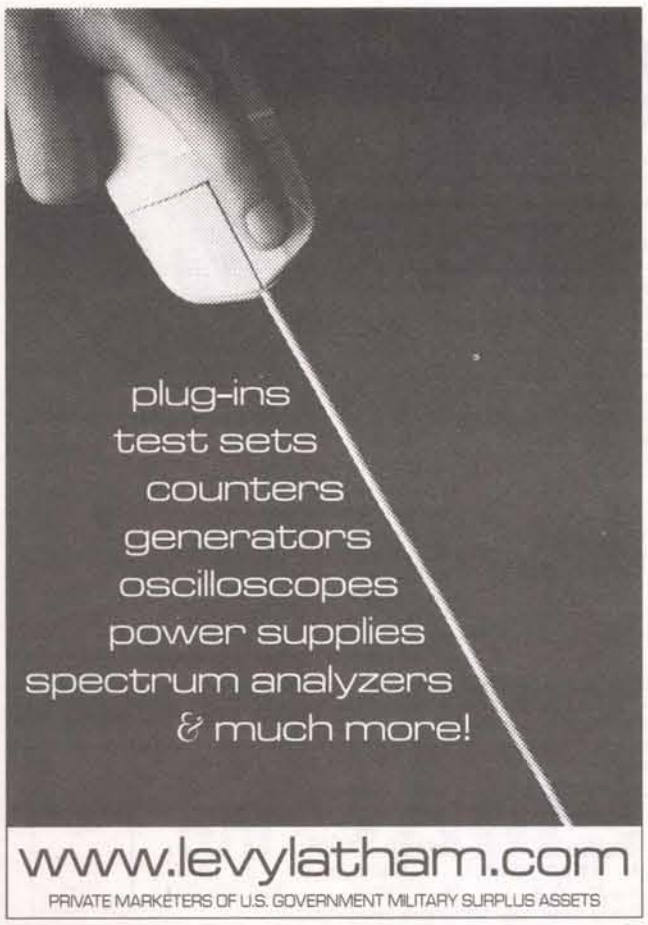


Write in 212 on Reader Service Card.

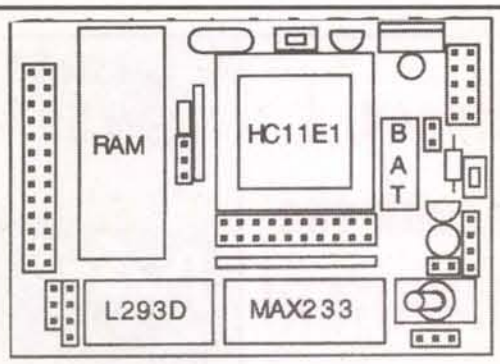


**SUPER-TCOMP Single Board Computer**

- Completely assembled. NOT A KIT!
- Program in C, assembly, IC, etc.
- 32K RAM chip with 10 year battery backup
- 5 volt low drop-out voltage regulator
- Max233 RS232 converter
- Most signals available at expansion ports
- External mode, reset and power connections
- Available options include I/O expansion and LCD board
- Comes with complete instructions
- Very small package: 2.1" x 3.0"
- 1 year limited warranty

--------- **ONLY $145**----------

Ray's Robotic Racers (310) 515-6075
http://www.teleport.com/~raybutts/

Write in 216 on Reader Service Card.

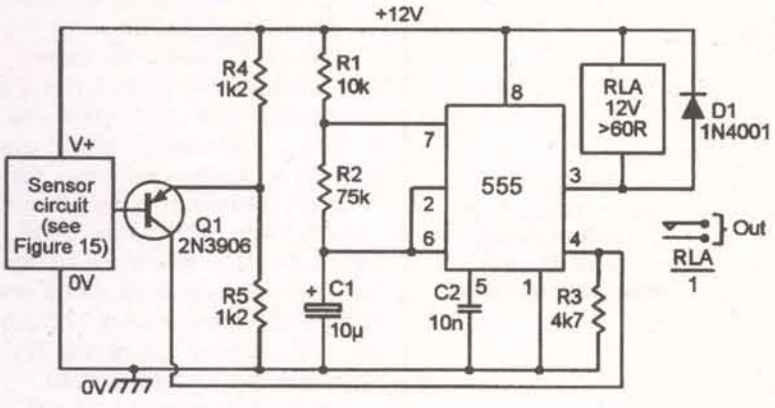


*Figure 13.* **Heat/light-activated relay pulser.**

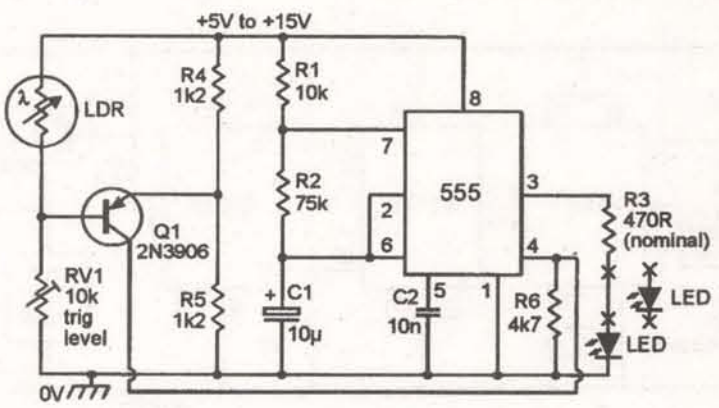


*Figure 12.* **Automatic (dark-activated) LED flasher.**

beyond pre-set limits. *Figures 13* to *15* show practical examples of such circuits.

The *Figure 13* circuit gives automatic heat or light activation of a relay pulser, which switches on and off at a once-per-second rate when activated. The relay can be any 12V type with a coil resistance greater than 60 ohms, and its contacts can be used to activate external electrically powered devices such as light, sirens, or alarm horns, etc.

*Figure 14* gives automatic heat or light activation of a monotone alarm-call generator, which generates an 800Hz alarm tone at several watts in an eight-ohm speaker when activated. Note that the high output current of the circuit may cause modulation of the supply line, so D1 and C3 are used to protect the circuitry from ripple effects, and D2 and D3 clamp the speaker's inductive switching spikes and thus protect output transistor Q2 from damage.

*Figure 15* shows the alternative sensor circuitry that can be used to auto-activate the *Figure 13* or *14* circuits. For light-sensitive operation, the sensor must be an LDR; for temperature-sensitive activation, it must be an NTC thermistor; in either case, the sensor element must have a resistance in the 470R to 10K range at the desired trigger level.

*Figure 14.* **Heat/light-activated medium-power monotone (800Hz) alarm.**

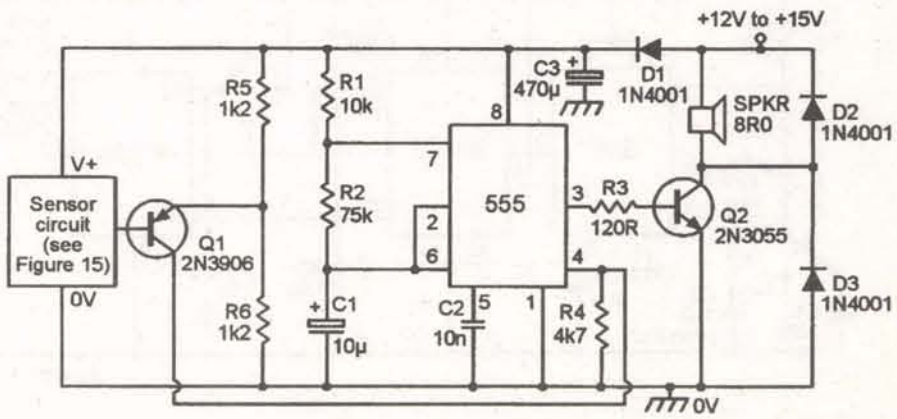


*Figure 15.* **Alternative sensor circuits for use with *Figure 13* or *14*, to give activation via (a) dark, (b) light, (c) under-temperature, or (d) over-temperature.**

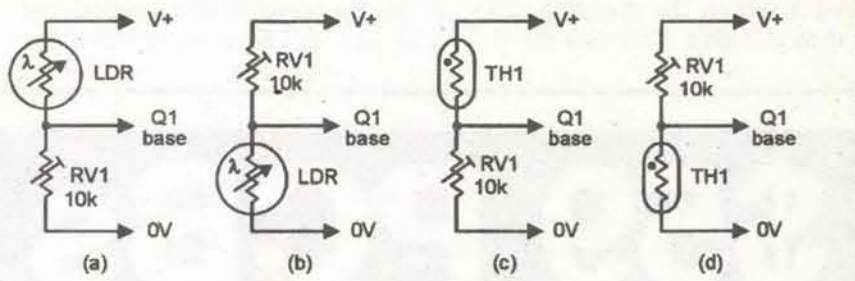


## LONG-PERIOD TIMERS

The 555 IC can be used to make an excellent manually-triggered relay-driving timer when connected in the monostable or pulse-generator mode, but cannot give accurate timing periods in excess of a few minutes, since it would have to use a high value electrolytic timing capacitor, and these have very wide tolerance limits (typically -50% to +100%) and large and unpredictable leakage currents.

An excellent way of getting very long but accurate timing periods is shown (in block diagram form) in *Figure 16*, which outlines the design of a 60-minute relay-driving timer. Here, the 555 is wired as a 2.28Hz astable that uses a stable polyester timing capacitor, and its output is fed to the relay driver via a 14-stage binary divider that gives an overall division ratio of 16,384. The divider action is such that (if its output register is set to zero at the start of the input count) its output switches high on the arrival of the 8192nd astable pulse and goes low again on the arrival of the 16,382nd pulse, thus completing the count cycle. Thus, the *Figure 16* circuit operates as follows:

The timing sequence is initiated by pressing push-button switch PB1, thus connecting the circuit's supply, activating the astable, and (via C2-R3) setting the counter to 'zero count' and driving its output low and turning the relay on; as the relay turns on, its RLA/1 contacts close and by-pass PB1, thus maintaining the supply connection once PB1 is released. This state is maintained until the 8192nd astable pulse arrives, at which point the counter's output switches high and turns the relay off, thus opening contacts RLA/1 and breaking the

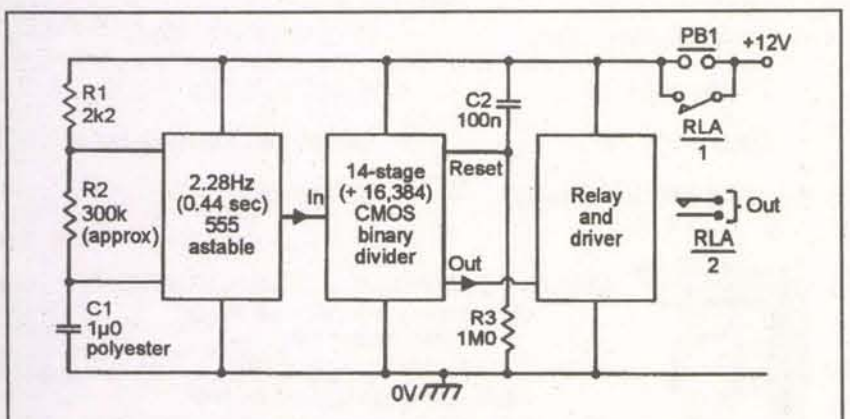


*Figure 16.* **Method of obtaining 60-minute timing period from the 555 IC.**

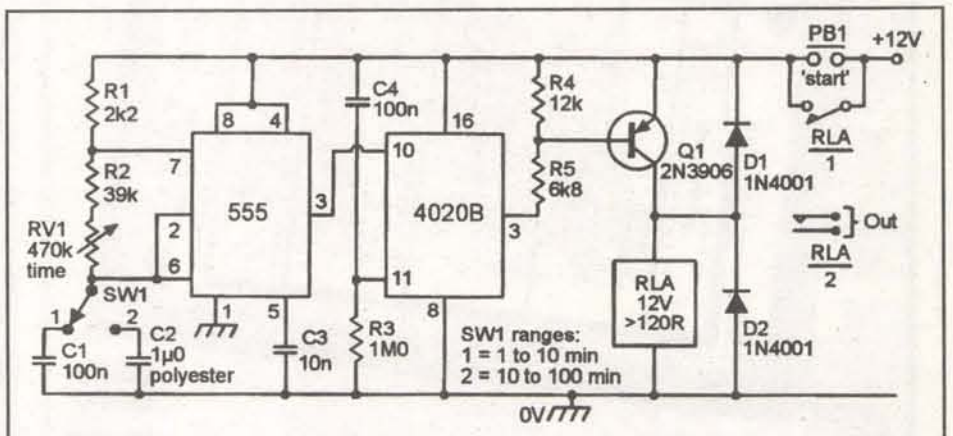


*Figure 17.* **Two-range (1-10 minute and 10-100 minute) relay-output timer.**

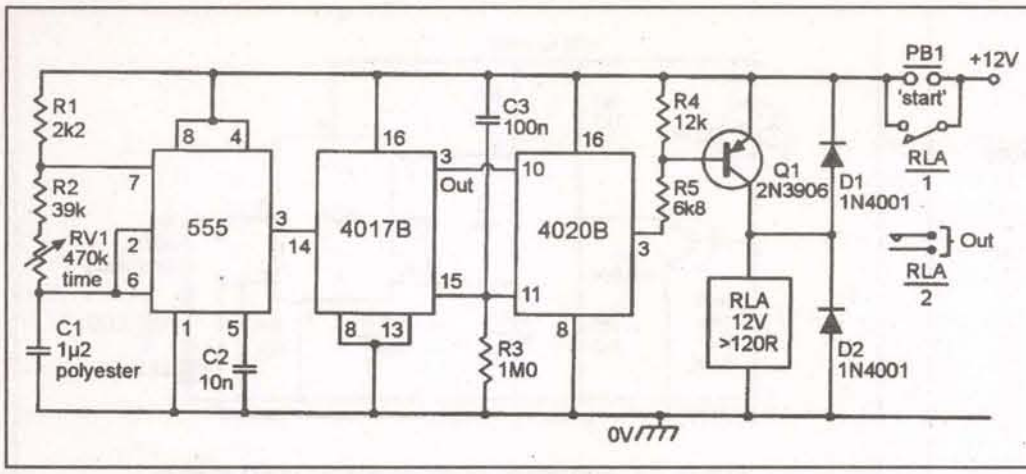


***Figure 18.*** **Extra-long-period (100 minutes to 20 hours) relay-output timer.**

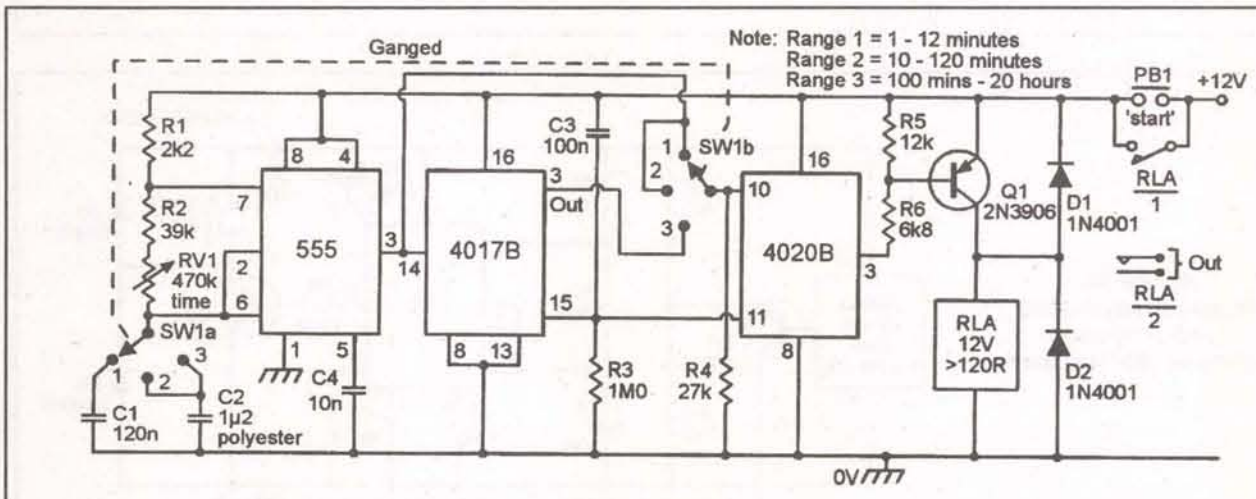


***Figure 19.*** **Wide-range timer that covers one minute to 20 hours in three decade ranges.**

circuit's supply. The operating cycle is then complete. Note that the astable operates with a period that is only 1/8192nd of the final 'timing' period, i.e., 0.44 seconds in this case, and that this period can easily be obtained without using an electrolytic timing capacitor.

*Figure 17* shows the above technique used to make a practical relay-output timer that spans one minute to 100 minutes in two overlapping decade ranges. Here, the 555 variable-frequency two-range astable feeds clock pulses to the 4020B 14-stage divider which, in turn, activates the relay via transistor Q1. The circuit uses a 12V supply, and the relay can be any 12V type with two or more sets of change-over contacts and a coil resistance of 120 ohms or greater.

*Figure 18* shows how the available time delay of the circuit can be further increased by wiring a 4017B decade divider between the output of the 555 and the input of the 4020B, to give an overall division ratio of 81,920, thus making delays in the range 100 minutes to 20 hours available from this single-range timer. Both divider ICs are automatically reset (via C3-R3) at the moment of switch-on (PB1 closure).

Finally, *Figure 19* shows the above circuit modified to make a wide-range general-purpose timer that spans one minute to 20 hours in three decade-related ranges; the 4017B decade divider stage is used only on range '3.' Range switching is obtained via two-pole three-way switch SW1. **NV**


# $59 PCBs

**And our layout software is *FREE***

Select our MiniBoard service and get 3 top quality 2.5" x 3.8" PCBs for only $59

1. Download our board layout software
2. Design your 2-sided plated-through PCB
3. Select the type of boards you want
4. Send us your layout over the Internet
5. Small orders are shipped the next business day

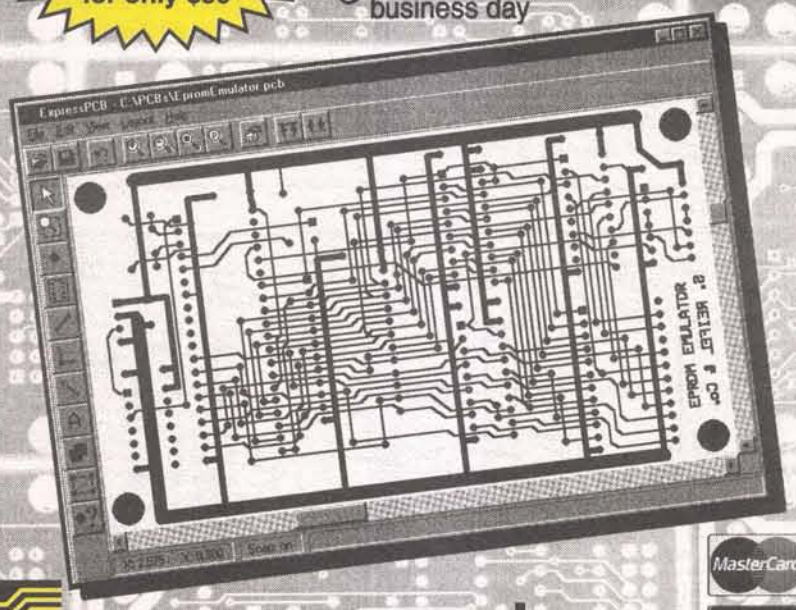

www.expresspcb.com

MasterCard VISA

# SAME DAY PROTOS

Modem Gerber files before 9 AM EST.
We ship the boards same day.
Multilayers NEXT DAY.

## Service:

- Instant Quotes
- Single / Double / Multi-Layers
- SMOBC and LPI
- Thru Hole or SMT
- Nickel and Gold Plating
- Routing / Scored Panels
- Blind and Buried Vias
- Electrical Testing
- Carbon Ink / Peelable Mask
- UL Approved

**CHICAGO CIRCUITS CORPORATION**
*Manufacturer of Printed Circuit Boards*
2685 UNITED LANE
ELK GROVE VILLAGE, IL 60007
E-MAIL: sales@chicagocircuits.com
**TEL: (847) 238-1623 • FAX: (847) 238-9160**
MODEM: (847) 238-1728

Write in 214 on Reader Service Card.

Power Quality Inc. 800-255-5545 Fax: 520-344-8847

**DC Adjustable Power Supplies** ..... $50

**UPS,** 250va to 3 kva, functional and nonfunctional .....email for list

**Power Conditioners,** Oneac, TLC, Teal, Sola, various sizes ...email for list

**BMI, Dranetz, and RPM** Power Quality Monitors .....$750 & up

www.powerqualityinc.com
Email:info@powerquality.org

**SURPLUS SALE**
**1,000,000 WALL TRANSFORMERS**

3VDC/100MA .... CX099 .... $0.75
6VDC/100MA .... CS039 .... $1.45
9VDC/100MA .... CR314 .... $1.45
12VDC/200MA .... CS033 .... $0.99
13.5VAC/400MA.. CR574 .... $1.29
24VDC/500MA .... CR174 .... $3.40
Min 1000/type -- Call for other types

**SURPLUS TRADERS**
PO Box 276,
Alburg, VT 05440
Tel: (01) 514-739-9328
Fax: (01) 514-345-8303
http://www.73.com/w
FREE CATALOG!

**ATTENTION:**
**NEED URGENTLY COMPONENTS!**
***Call* TEL: (818) 705-1880**
**FAX: (818) 705-1881**
*Below Part #s are only a few examples*

MC68HC705C8A
PIC16C56
PIC16C622, ETC.
GAL 22V10
GAL16V8, ETC.

**EPROM**
2732
27C64
27C512
27C040 ETC.

**FLASH EPROM**
29F010
29F040
28F080
28F016 ETC.

**STATIC RAM**
6116-6264
62256-62512, ETC

**PROCESSORS**
8151-8749-87C51
8255, ETC

**SINACO ELECTRONICS**
SPECIALIZING IN HARD-TO-FIND PRODUCTS

**MEMORY**

72-PIN SIMM
8x32 (32MB) EDO ..... $82.50
16x32 (64MB) EDO ..... $132.00

SDRAM PC-100 DIM
4x64 (32MB) ..... $39.00
8x64 (64MB) ..... $63.50
16x64 (128MB) ..... $126.00
32x64 (256MB) ..... $225.00

CACHE/VIDEO KITS UPGRADE
1MB Video for P.B. 486 ..... $35.00
1MB Video for P.B. Pentium ..... $18.00
128K Cache for P.B. 486 ..... $18.00
512K Cache for P.B. 486 ..... $49.00
256K Cache Module/Pentium ..... $25.00

SPECIAL CONTROLLER
AT90S8515-4PC ..... $7.00

*We also stock **EPROMs, CPU, UPGRADE KITS** for other name brand computers and printers.*

*Visit our website for more details or order by calling directly to our toll free **1-800-586-4900***

**www.lapazelectronics.com**

**La Paz Electronics International, Ltd.**
PO Box 261095 San Diego, CA 92196
**Phone** (858) 586-7610 **Fax** (858) 586-1482

*Continued from page 62*

**ANAHEIM WIRE PRODUCTS. DISTRIBUTOR OF ELECTRICAL WIRE AND CABLE** since 1973. Items available from our stock: Hook up wire, Automotive primary wire, GXL, SXL, Plenum cable, Teflon wire, Multi-conductor cable, Irradiated PVC, SO-CORD, Mil-Spec wire, Building wire, Welding cable, Battery cable, Telephone wire, Shrink tubing, Cable ties, Connectors. Wire cut & strip to specs. If interested, please call **1-800-626-7540**, FAX: 714-563-8309. Visa/MC/Amex. SEE US ON THE INTERNET: http://www.anaheimwire.com OR E-Mail: info@anaheimwire.com

**HARD-TO**-find parts: big screen screens, keypads, picture tubes, flybacks, tuners, CRT sockets, & modules for all TVs. 478-272-6561. Scarborough TV, 1422 Old River Road, East Dublin, GA 31027.

**HAM HOBBYIST**, security equip., phone installation equip & materials, electronic parts & components packaged for hobbyist, used computers, and STUFF. Catalog on-line 13 October, Burlington, NC inspection 17-19 Oct., bids due 19th, www.gosam.com 336-222-0746.

## MISCELLANEOUS ELECTRONICS WANTED

**DEC EQUIPMENT WANTED**!!! We are buying DEC systems, boards, terminals, drives and peripherals. Also Scientific Micro Systems (SMS), DSD, Datability, Dilog, other DEC compatibles, and Computer Output Microfilm (COM) units. Please call for a quote or fax us your equipment list. We buy, sell, and trade. **KEYWAYS, INC.**, 937-847-2300 OR fax 937-847-2350.

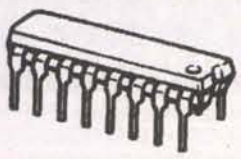

**WANTED: EXCESS ELECTRONIC COMPONENTS, BOARD-LEVEL COMPONENTS; MILITARY COMPONENTS; ICs, MEMORY, TRANSISTORS, DIODES, CAPS, RELAYS, ETC. CALL LPS 562-439-2453 FAX 562-439-0453.**

**WANTED: BALANCING** machines & vibration analyzing equipment manufactured by the following: Spectral Dynamics, Hofmann, Bentley Nevada, Schenck, IRD Mechanalysis, Gishott. Contact Mike Park at E.T. Balancing, 12823 Athens Way, Los Angeles, CA 90061. 310-538-9738, FAX: 310-538-8273.

**WANTED: TUBES**, radios, transmitters, receivers, gyros, bearings, connectors, relays, lamps, synchros. Hyness Company, 709B Delair Road, Monroe Twp., NJ 08831. Phone: 609-395-1116, FAX 609-395-1117.

**WANTED: AVIONICS** test equipment, IFR, 600A, 401L, others, Collins, King, Sperry, North Atlantic, Litton INUs LTN series, rate and tilt tables, air data test sets, 941-625-3222 P, 941-625-0494 F, E-Mail: avionics@afcon.net

**WANTED: MILITARY** capacitors, resistors, transistors, diodes, ICs, semi's, etc. Please fax/E-Mail excess lists & RFQs 818-769-1002 fax 818-769-1084. electmatind@earthlink.net & http://www.militarycomponents.com

**WANTED: X-BAND** radar equipment. Military, civilian, working or not, parts, TMs, etc. Box 10215, Pittsburgh, PA 15232.

**WANTED: TI55A** Sci. calculator in good working order, will pay. Hugh M. Adams, hughmadams@msn.com 1011 Hondo Ave., Apt. D, Fort Walton Beach, FL 32547-3823, 850-864-2414.

**CASH PAID FOR ICs.** Military or commercial integrated circuits, transistors, diodes, any semiconductors. **ELECTRONIC SURPLUS, INC.**, 5363 Broadway, Cleveland, OH 44127. 216-441-8500 or fax 216-441-8503, since 1946. www.electronicsurplus.com

## BBS & ONLINE SERVICES

**WANTED: MILITARY** capacitors, resistors, transistors, diodes, ICs, semi's, etc. Please fax/E-Mail excess lists & RFQs 818-769-1002 fax 818-769-1084. electmatind@earthlink.net & http://www.militarycomponents.com

## EDUCATION

**MAGICIAN IS** available to solve your RF problem. I will teach you in my laboratory how to do it. Young engineers and technicians are welcome. SMT prototyping up to 3GHz for customers. Minaret Radio, John Horvath ph: 909-943-3676.

**TECHNICIAN WANTED** for audio telephone conferencing. Located in El Monte, CA. Contact Larry at 909-688-6467.

## BUSINESS OPPORTUNITIES

**WANTED: MILITARY** capacitors, resistors, transistors, diodes, ICs, semi's, etc. Please fax/E-Mail excess lists & RFQs 818-769-1002 fax 818-769-1084. electmatind@earthlink.net & http://www.militarycomponents.com

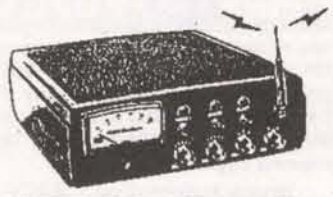

**COUNTER-SURVEILLANCE=$250 HR!** Electronic eavesdropping is unbelievably widespread! Are you sure you're safe? Learn how others (without prior experience) earn **$250 HR** in the fascinating field of COUNTER-SURVEILLANCE! For FREE catalog call: **1-800-732-5000.** HTTP://WWW.SPY-CITY.COM

## REPAIRS — SERVICES

**PRINTED CIRCUIT** design by professional with 30+ years: conventional, multilayer, downhole, fine line. Prototype and production fabrication. Reverse engineer existing 2-layer board. Toll free 877-236-3223. www.circuit-applied-tech.com

**(E)EPROM PROGRAMMING** done quickly and economically. One day turn around typical. Simple copy $3 per device. Also prototyping, design, and consulting services available. Call or send SASE to: **Luzer Electronics, 4023 North Bayberry, Wichita, KS 67226. 316-687-2127, FAX 316-687-3103.**

**WANTED: MILITARY** capacitors, resistors, transistors, diodes, ICs, semi's, etc. Please fax/E-Mail excess lists & RFQs 818-769-1002 fax 818-769-1084. electmatind@earthlink.net & http://www.militarycomponents.com

**CIRCUIT BOARDS** for projects, prototypes, short runs. From your artwork. Low rates. Atlas Circuits 704-735-3943. www.pcbatlas.com

**WELD ALUMINUM WITH PROPANE**! EZ, INEXPENSIVE, STRONG. DETAILS: WEEKS, 36 CAROLINA ST., TAYLORS, SC 29687. 1-800-547-WELD(9353) FAX 864-244-6349. http://www.durafix.com

**INVENTORS! ELECTRO-**mechanical prototypes from your design. Consulting is available. Reasonable rates. No project too small. PACIFIC CAMERA 1-800-481-0146.

**Subscribe to *Nuts & Volts* today!**

Not only do you get a great magazine each month, but you'll also be entitled to a 10% discount off the lastest electronic titles like these (see page 87 for details), *plus* you'll be automatically entered each month in our prize drawing (see page 44)!

See our subscription card included in this issue for ordering details!!

## 2.4 GHz Wireless Transmitter & Receiver

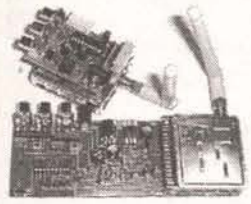

$89-$159 per pair

- Microwave 2.3 GHz to 2.5 GHz
- **NEW!!** 8 Channel Version
- Audio, Video (NTSC + PAL)
- **Frequency Development Kit Available**

**MATCO**

OEM Sales 630-350-0299
General Sales 847-605-1020
www.mat-co.com

## SMART CARDS

*Complete system! Program your own smart card applications in easy to use BASIC!*

- Security Systems
- Time Cards
- Emulation
- Access Control - Home, Auto
- Robotics Programming
- DATA Security

***Tool Kit comes complete with:***

- SmartCard Programmer
- Developer Software Package
- User Manual in printed form
- 3 Blank Smart Cards

***Complete system for only $79.95***

***Mention this ad in Nuts&Volts and get 10% off!***

*We accept*
*VISA • Master Card • American Express*

**To Order Call 1-800-773-6698 Worldwyde.Com, 33523 Eight Mile Rd #A3-261, Livonia, MI, 48152**
**Visit us online http://www.worldwyde.com**

## MC2000-074
## Vesta Technology
www.vestatech.com

8k or 32k E²PROM
22 DIO / 5 A/D
2 x RS232
RTC
Timers
Interrupts

$59 @ 1
$39 @ 1000
$189 DevKit w/ Basic, LCD, Keypad, Battery pack and Carrier board

Fast, compiled Basic w/IDE
easy I/O & resident debug

**(303) 422-8088**

**SWITCHES — LEDs — MOTORS — SPEAKERS — POWER SUPPLIES — CONVERTERS — CHEMICALS — WIRE — OTHER ELECTRONIC PARTS** — All types — All sizes — Commercial to Spec Grade

| | |
|---|---|
| Full Size Toggle Switch, 1/2" Dia., as low as | 36¢ |
| Mini Toggle Switch, 1/4" Dia., as low as | 30¢ |
| Sub-Mini Toggle Switch, 1/8" Dia., as low as | 32¢ |
| Rocker Switches, as low as | 20¢ |
| Slide Switches, as low as | 20¢ |
| Push Button Switch, 1/4" Dia, as low as | 29¢ |
| Surplus Small and Mini Motors, as low as | 50¢ |
| Mini Speakers, as low as | $1.00 |
| 3mm LED — Red, Green, Yellow, as low as | 15¢ |
| 5mm LED — Red, Green, Yellow, as low as | 15¢ |

*Let us quote on your specific LED needs*

AC-DC Converters, 7 outputs, 1000 mA ..... $4.00

**Chemicals, see catalog**
**WIRE: Hook-Up, Lead, Speaker & Telephone**

***CALL OR FAX FOR QUOTES OR CATALOG***

**DEMAR ELECTRONICS**
P.O. Box 7215, Algonquin, IL 60102
Toll Free 877-655-6433
Fax 847-854-4434

## Got Dial Tone?

***Telecom Hardware/Software Developers***

STOP using your phone lines to test and demonstrate your telecom devices. Our affordable telephone line simulators offer authentic USA dial tone, busy signals and ringing. Supports high speed analog modems too!

**RING-IT! TELCO SIMULATOR**
- Caller-ID
- LED display
- Audio Output Jack
- Real 20Hz Ring
- $325 ($169.95 kit avail)

NEW!

**PARTY-LINE TELCO SIMULATOR**
- Six Extensions
- Caller-ID
- Distinctive Ringing
- CPC Disconnect
- $425 ($199.95 kit avail)

*Digital Products*
COMPANY

134 Windstar Circle
Folsom, CA 95630 USA
**Tel: 916-985-7219**
Fax: 916-985-8460

**http://www.digitalproductsco.com**

## PRINT to VIDEO!

**Tiny BOB-II module superimposes up to 308 characters on NTSC/PAL video or generates video automatically. Fast 2.4~19.2kbps RS-232 serial interface. Simple to control; like a printer. Many powerful applications:**

**Home Automation - MATV**
**Video Inspection & Testing**
**Surveillance - CCTV - ATV**
**Remotely Piloted Vehicles**
**Gaming - Racing - Sports**
**Process/Experiment Monitor**
**Robotics - Electronic Signs**

BOB-II-NTSC only $79.95

**DECADE ENGINEERING**
5504 ValView Dr. SE, Turner, OR 97392
Tel: 503.743.3194 – Fax: 503.743.2095
**Information & Ordering: www.decadenet.com**

## GetToner.com

**Ink Jets - Toners - Fax Ribbons**

Guaranteed Lowest Prices on Compatibles or We'll Match the Price and Give you 10% Additional Compatibles for:

- HP
- Canon
- Epson
- Lexmark
- Brother
- Apple

and MORE
FREE SHIPPING • NO MINIMUM

**www.GetToner.com**
**1-800-933-8211**

## Press-n-Peel Transfer Film
### PC Boards in Minutes

8.5" x 11" Shts.
* Or Photocopy
**Use standard household iron

1. LaserPrint*
2. Press On**
3. Peel Off
4. Etch

Use Standard Copper Clad Board
20 Shts $30/ 40 Shts $50/ 100 Shts $100
Visa/MC/PO/Ck/MO $4 S&H/Foreign Add $7

**Techniks Inc.**
P.O. Box 463, Ringoes NJ 08551
ph. 908.788.8249 fax 908.788.8837
www.techniks.com
Vist Our E-Store On-Line!

## CUSTOM PLASTIC PARTS

- MODELS (WOOD AND RESIN). TO EVALUATE YOUR PARTS BEFORE YOU COMMIT TO MANUFACTURE A MOLD.
- MOLD DESIGN AND BUILDING.

- PRODUCTION OF INJECTION MOLDED PARTS. NO ORDER TOO SMALL OR TOO BIG.
- VERY COMPETITIVE ON HIGH LABOR PARTS.

We can also inject your parts on manual low pressure machines for very small runs or prototypes of parts up to 2 oz. At surprisingly low price.

**USA Office: V&V Mach. And Equip. Inc.**
**Tel. (281) 397-8101, Fax. (281) 397-6220.**

Please send blue prints or samples to:
**Marketing Tech. S.A.** Alamo 93, 4 Piso Sta. Monica, Tial. Edo. De Mexico 54040 Tel. 011 (525) 361-3351. Fax. 011 (525) 361-5996. ATTN: VICTOR M. MENDOZA.

PLEASE VISIT OUR WEBSITE
WWW.VANDVMACHY.COM

## New! ActiveWire™ USB Simple USB Interface

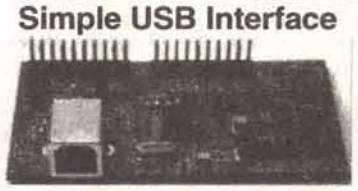

- Internet Browser Script-able
- 24 MHz CPU core with USB
- Firmware downloadable via USB
- 16 bit parallel I/O
- Expandable add-on boards
- New firmware and scripts available from website

**$59** plus shipping
**ActiveWire, Inc.**
www.activewireinc.com
ph(650) 493-8700 fx(650) 493-2200

## QUALITY KITS

**#1 Source for Electronic Kits**

Great selection of Hi-Fi AUDIO Kits, PSUs, Transmitters, Oscilloscopes, PIC Programmers, and much more.

Toll Free Order Line:
**1-888-464-5487**

Secure On-Line Ordering
**www.qkits.com**

Call 613-544-6333 for free catalog
**North American Kit Distributor**
49 McMichael St., Kingston, ON
K7M 1M8, CANADA

## RS485/422/232/TTL

ASC24T $45

Converters
Repeaters
Fiber Optics
Digital I/O
Multidrop RS232
Custom Units
Auto TX Enable

**Extensive Interface Product Line**

RS232 "Extension Cords"
Up to 115.2 Kbps, 4000 ft.++
Large Multidrop Networks.
Isolated Units. Smart Units.
Remote Relay "Extension Cords"

Call the RS485 Wizards at:
**(513) 874-4796**

**RES** R.E.Smith
www.rs485.com

## Fast / Economical / Easy CIRCUIT BOARDS

As-Low-As **$80.00** Per Lot

- Next Day Delivery
- 2-Sided, plated thru
- Order over the Internet

*For Complete Details and Instructions Log on:*

**www.pcbexpress.com**

ECD SINCE 1964

13626 South Freeman Rd., Mulino, OR 97042
(503) 829-9108 Fax (503) 829-5482

## $209.95 plus $8.50 S&H
### 5.6" COLOR LCD TFT NTSC VIDEO MODULE

Commercial quality, completely self contained video display. 5.6" high resolution display can be viewed up to a 45 degrees. RCA A/V inputs. Accepts standard composite video from any camera or VCR. Overall module size: 6.6" x 5.8"x 1.2" Active screen area 4.5" x 3.3" Resolution is 960 (hor.) x 234 (ver.) = 224,640

Miller Engineering, P.O. Box 282,
New Canaan, CT 06840-0282
Tel. (203) 595-0619 Fax (203) 322-6116
www.microstru.com/lcd.html
Visa/MC accepted, personal checks must clear first

## Cable TV Remotes Blow-Out Sale

We carry all models

| 10pc. | 50pc. | 100pc. |
|---|---|---|
| $3.75 | $3.50 | $3.25 |
| **300pc.** | **500pc.** | **1kpc.** |
| $3.00 | $2.75 | $2.50 |

Rebelion-3 125ch. Converter

| 12pc. | 50pc. | 100pc. |
|---|---|---|
| $50.00 | $48.00 | $46.00 |

**Globaltech 1-(800)-582-5116**
View Our On-Line Display Catalog at:
**www.globaltechdistributors.com**

## SURVEILLANCE
### UHF TRANSMITTERS

- ROOM Battery & Mains • TELEPHONE
- RECEIVERS • TELEPHONE RECORDER
- VEHICLE TRACKING SYSTEM

**DISPLAYS ON WEB SITE**
**PRICE SURVEILLANCE**

P.O. BOX 6856, TALLAGH,
DUBLIN 24, IRELAND

Tel: +353-1-451-7653
Fax: +353-1-451-7706
E-Mail: crystal@pricesurveillance.com

**www.PRICESURVEILLANCE.com**

## PCB EXPRESS, INC.

***PROTOTYPE TO PRODUCTION***

| | |
|---|---|
| S/SIDED: 5-days, 10 Pcs. | $275.00 |
| D/SIDED: 5-days, 5 Pcs. | $300.00 |
| D/SIDED: 5-days, 10 Pcs. | $350.00 |
| 4-LAYERS: 5-days, 5 Pcs. | $750.00 |
| 4-LAYERS: 7-days, 10 Pcs. | $850.00 |
| 6-LAYERS: 5-days, 5 Pcs. | $950.00 |
| 6-LAYERS: 7-days, 10 Pcs. | $1,175.00 |

(Up to 30 sq. inch each, includes Tooling)

**SERVICES** – *UL Approved*
SMOBC, LP1 mask & Legend
Photoplotting, Electrical Testing
Thru hole/SMT, Gold/Nickel Plating
Routing and Scored Panel, Instant Quotes

PH: **(888) 427-2920**, Fax **(847) 427-1949**
E-Mail: cir1920@aol.com
**LOWEST COST & FAST DELIVERY**

## VIDEO PRODUCTS

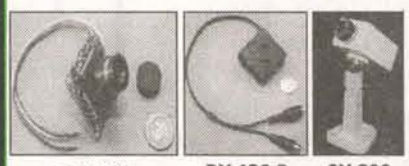

CNL-100 $49 · BX-120-P $59 · SX-800 $79

- 430 TV Lines Resolution
- 9-14 VDC Operation
- Infrared Sensitive
- SX-800 has Audio Output
- A-300 Camera Enclosure also available

**MATCO, INC.**
*Schaumburg, IL*
1-800-719-9605 • 1-847-619-0852 FAX
E-Mail – info@mat-co.com
Website – www.mat-co.com

## IC PROGRAMMERS

ADVANTECH EETOOLS NEEDHAMS DATA IO BP MICRO
XELTEK SYSTEM GENERAL ICE TECHNOLOGY CHROMA

1295 Advantech Labtool-48
895 Needham EMP-30
869 EETool Topmax
650 Xeltek SuperPro III
629 ICE Tech Micromaster LV
469 Xeltek SuperPro F
419 Needham EMP-20
419 EETool Megamax
379 Xeltek SuperPro LX
299 EETool ChipMax
279 Xeltek Rommaster II
209 Needham EMP-10

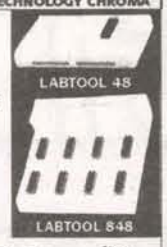


*Gang Programmers 4 TO 8 Sockets*
CALL Advantech Labtool-848 8XGang
1085 EETool TopMax W/8XGang
689 Needham SA-20 8X Gang
529 EETool MegaMax4G 4XGang

*WE CARRY THE BEST SELECTION IN THE WORLD!*

**General Device Instruments**
Sales 916-393-1655 Fax 916-392-4949
Order Only Toll Free 800-760-3820
WWW.GENERALDEVICE.COM
WWW.LABTOOL.COM
LABTOOL-48
LABTOOL-848

## EPS

**EPROMS** AS LOW AS **25¢**

| | | | |
|---|---|---|---|
| 27C256 | 27C040 | 27C1024 | 87C51 |
| 27C512 | 27C400 | 28F010 | 8751 |
| 2732A | 27C4096 | 28F020 | 8755 |
| 27C32 | 574000 | 28F040 | MC68HC70 |
| 27C128 | 574200 | 8749H | 5C8A |
| 27C64 | 27C402 | 8748H | PIC16C56 |
| 2716 | 27C020 | 8741 | PIC16C54 |
| 2708 | 27C210 | 8742 | PIC16C622 |
| 27C512-90 | 27C010 | 8744 | GAL16V8 |
| | | | GAL22V10 |

**STATIC RAM**: HM628128, 62256, 6264, 6116
**PROCESSOR**: 8255, 8254, 80C31
**MEMORY**: D-RAMS, SIMM

- Many more parts in stock
- All major brands
- All guaranteed

E-Mail: eproms@aol.com
TEL: (818) 774-9444 · FAX: (818) 774-0822
**WE BUY EXCESS INVENTORY**

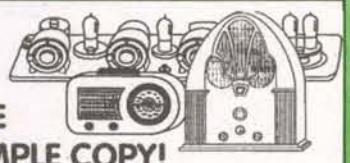

**FREE SAMPLE COPY!**

## ANTIQUE RADIO CLASSIFIED

***Antique Radio's Leading Monthly Magazine***

**Articles – Classifieds – Ads for Parts & Services. Also: Ham Equip. – Books – Telegraph – 40's, 50's & 60's Radios – Early TV – Auction Reports & more...**

**1-Year: $39.49 ($57.95 by 1st Class)**
**6-Month Trial - $19.95. Foreign - Write.**

A.R.C., P.O. Box 802-G23
Carlisle, MA 01741
Call: 978-371-0512 — Fax: 978-371-7129
Web: www.antiqueradio.com

SINGLE SIDED PCBS **9¢**

* 9¢ PER SQUIN, $100 SET UP, SMOBC, ONE OUNCE COPPER, PC 75, 1/16", ONE SOLDER MASK AND ONE SILK SCREEN. PHOTOPLOT $50.

DOUBLE SIDED PCBS **14¢**

* 14¢ PER SQUIN, $150 SET UP, PTH, ONE OUNCE COPPER, FR4 1/16", TWO SOLDER MASK AND ONE SILK SCREEN. PHOTOPLOT $75.

**LOWEST PRICE IN THE INDUSTRY FOR PROTOTYPES DELIVERED IN 5 WORKING DAYS.**

PLEASE VISIT OUR WEB SITE FOR MORE INFORMATION AND OTHER PRICE EXCEPTIONS WWW.VANDVMACHY.COM

* THESE PRICES APPLY ONLY TO RECTANGULAR PCBS 3/4 WEEK DELIVERY

**V&V MACHY & EQUIP. INC**

V&V MACHY AND EQUIP. INC. (HOUSTON TX. OFFICE) PH. (281) 397 8101 FAX (281) 397 6220
MARKETING TECH. S.A. (MEXICO PLANT) PH. 011 525 3613351, FAX 011 525 3615996

## PIC MICRO TOOLS

**Easy Solderless Prototyping!** On board RS-232, In Circuit Programming. No cable or chip swapping! Fully Documented. Starting at Only **$39.95**

**ISP PRO Programmer** PIC - Scenix - Atmel - I2C - SPI In Circuit or on board. The last programmer you'll ever have to buy! Only **$59.95**

**Program PIC's in BASIC!** Pic n' Basic Compiler **$89.95** Pic n' Basic PRO Compiler **$149.95** Includes Windows IDE with ISP PRO programmer software built in FREE!

**Combo Deal** - Pic n' Basic, ISP PRO, 1802 Solderless Proto Board and PIC16F84 plus cables and power supply all for only **$179.95**

*Mention this ad in Nuts&Volts and get 10% off!*

*VISA • Master Card • American Express*
To Order Call **1-248-426-8144** Basic Micro
33523 Eight Mile Rd #A3-261, Livonia, MI. 4815-2
**Visit us online http://www.basicmicro.com**

## ASSEMBLY & ENGINEERING

**Producible designs since 1970**

**Contract Engineering**
- Embedded Microprocessors
- PCB Layout and Packaging Design
- Analog Including RF to 1 GHz
- Instrumentation
- A/D and D/A

**Contract Assembly**
- High-Speed Fuji Surface Mount
- Through hole
- Turn-key or Kit
- Run sizes one through thousands
- Test and burn-in available

**Bilocon Corp.**
800-736-5927
425-353-2276
www.bilocon.com

## Stereo Microscopes

**Surface mount Assy. & inspection.**
**All sizes of PC boards & instruments**
**Photo & Video adapters for many.**
**New with 5 year warranty.**
**Catalog available.**

*Seabird* **Technical Ph 650/ 367-8320**
**3580 Haven Avenue**
**Redwood City, CA 94063**
**Jlittle@netwizards.net**

## CONTROL · MEASURE · INPUT

**MODEL 40–$109**
- RS-232 interface
- 28 lines digital I/O
- Eight analog inputs
- PWM output
- Three stepper ports

**MODEL 100–$279**
- 12-bit 100KHz A/D · Four analog outputs
- Three timer counters · 24 digital I/O

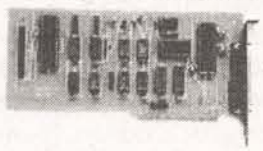

*PRAIRIE DIGITAL, INC.*
920 SEVENTEENTH ST., INDUSTRIAL PARK
PRAIRIE DU SAC, WI 53578
TEL: (608) 643-8599 · FAX: (608) 643-6754

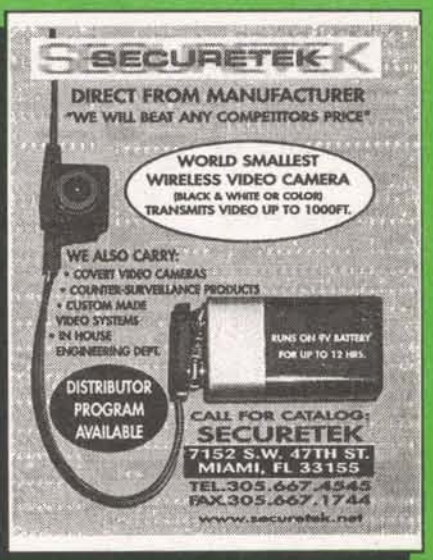


## CABLE CONVERTS

TV86/3 86/CH TV86/3V/A
TRIVISON 550/3 $37.95
VIEW MASTER 2600
125 CHANNEL UNITS
TRI 860/3 10 LOT $49.95
TRI 860/3V/A 10 LOT $59.95
V/MASTER 3800/3V/A

FOSS WAREHOUSE DIS
289 SCHENCK ST
N TONAWANDA NY 14120
800-473-0506
800-488-0525 FAX
716-694-6400 716-693-4322 FAX
E/M FOSS@BUFFNET.NET
WEB PAGE: WWW.FOSSW.COM
NO DISCRAMBERS ONLY CABLE CONVERTS

**GPS Units from Communications Surplus**

**Trimble SVeeSix-CM3**
**6 Chan Differential Module & Magnet Mt. Antenna $49.95**

**Rockwell MicroTracker LP**
**5 Chan NMEA Differential OEM Module $59.95**

Call 713-526-8000 Or
1-877-878-6GPS Or Fax 713-522-6309
Email @ commsurplus@ev1.net
or www.commsurplus.com

## DEGREE ON A DISK!

**EM FORMULARY**

500+ formulas, conversions, and tables. Electronics, science, math. Practical, educational, and easy to use. Internet Special $19.95 + tax/ship. Order online, more info and sample screen at our web site.

**ELECTRO SCIENCE APPLICATIONS**
**(562) 989-1190**
**www.esap.com**

## SMARTCARD

**DEVELOPMENT KIT**
INCLUDES: UNIVERSAL PROGRAMMER, POWER SUPPLY, DB9 CABLE DEVELOPMENT SOFTWARE, 4 BLANK BASIC SMARTCARDS.
**KIT $200.00 + SHIPPING**
EXTRA CARDS $20.00 EACH OR 8/$100.00
SOFTWARE INCLUDED.
**POSSIBLE APPLICATIONS INCLUDE:** IDs, COMPUTER SECURITY, SECURE DATA, MEDICAL RECORDS, ETC.
*NOT FOR USE WITH DSS TV*

**Call TONY at WIZARD ENGINEERING**
1-419-385-3100

# Open Channel

## Using the P-I-N Diode

by Joseph J. Carr

The P-I-N (or "PIN") diode has a number of uses that are unique, and will do some of the same jobs as regular signal diodes better. In this article, we will look at the structure of the PIN diode, and some of its applications.

Consider some of those applications. Most modern radio transceivers (i.e., "transmitter-receiver") use "relayless" switching to go back and forth between the RECEIVE and TRANSMIT states. Relayless switching is usually done with PIN diodes. Receiver IF filters and front-end bandpass filters are selected with a front panel switch that handle only direct current. How? Again, PIN diodes. These interesting little components allow us to do switching at RF, IF, and audio frequencies without routing the signals themselves all over the cabinet. In this month's column, we will see how these circuits work.

The P-I-N or "PIN" diode is different from the standard PN junction diode (see Figure 1A), which consists of P-type and N-type semiconductors mated together at a junction. The PIN diode has an insulating ("Intrinsic," hence the "I" in "PIN") region between the P- and N-type material (Figure 1B). It is therefore a multi-region semiconductor device despite having only two electrodes. The I-region is not really a true semiconductor insulator, but rather is a very lightly doped N-type region. It is called an "intrinsic" region because it has very few charge carriers to support the flow of an electrical current.

When a forward bias potential is applied to the PIN diode, charge carriers are injected into the I-region from both N and P regions. But the lightly-doped design of the intrinsic region is such that the N- and P-type charge carriers don't immediately recombine (as in PN junction diodes). There is always a delay period for recombination. Because of this delay phenomena, there is always a small but finite number of carriers in the I-region that are uncombined. As a result, the resistivity of the I-region is very low.

One application that results from the delay of signals passing across the intrinsic region is that the PIN diode can be used as an RF phase shifter. In some microwave antennas, phase shifting is accomplished by the use of one or more PIN diodes in series with the signal line. Although there are other forms of RF phase shifters (e.g., phase shifter) usable at those frequencies, the PIN diode remains popular.

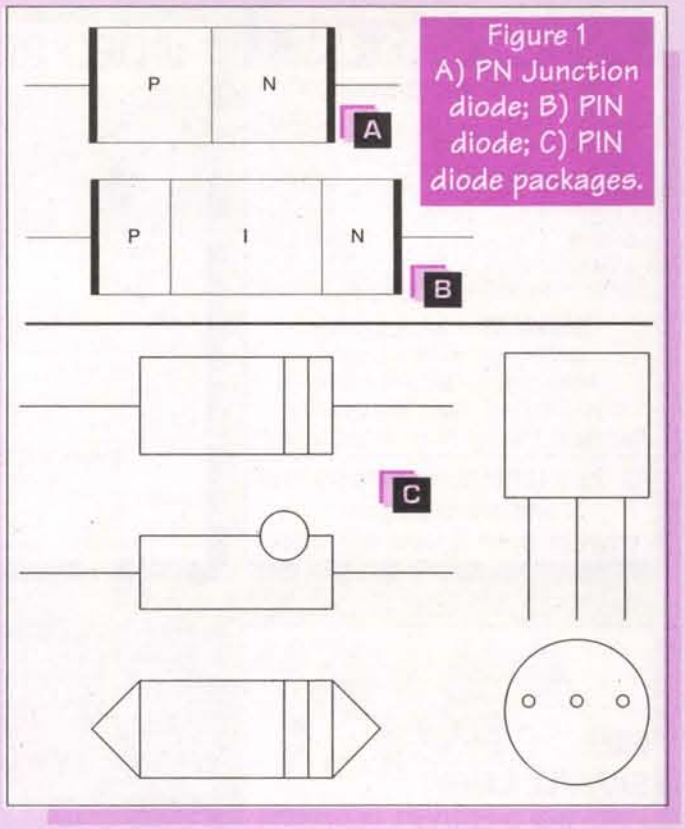


Figure 1
A) PN Junction diode; B) PIN diode; C) PIN diode packages.

Figure 1C shows some of the package styles used for PIN diodes at small signal power levels. All but one of these shapes is familiar to most readers, although the odd-shaped flat package is probably recognized only by people with some experience in UHF and up switching circuits. The NTE-553 and ECG-553 PIN diode will dissipate 200 mW, and uses the standard cylindrical package style. The NTE-555 and ECG-555 device, on the other hand, uses the UHF flat package style and can dissipate 400 mW. I used these diodes for the experiments performed to write this column because they are service shop replacement lines, and both ECG and NTE are widely distributed in local parts stores. An alternative that might be harder

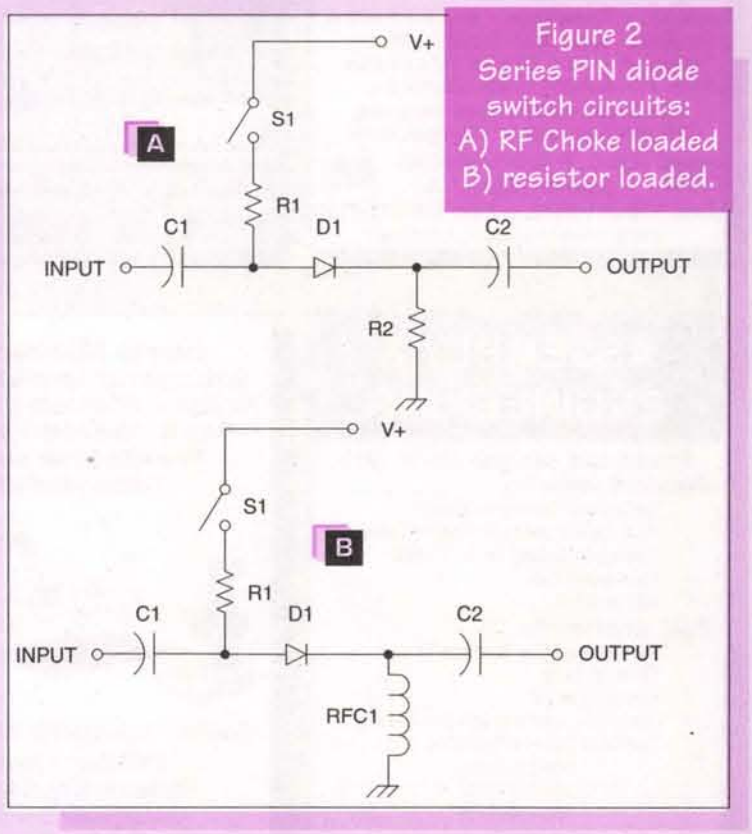


Figure 2
Series PIN diode switch circuits:
A) RF Choke loaded
B) resistor loaded.

**EZ-EP DEVICE PROGRAMMER - $169.95**

Check Web!! -- *www.m2l.com*

***Fast*** - Programs 27C010 in 23 seconds

***Portable*** - Connects to PC Parallel Port

***Versatile*** - Programs 2716-080 plus EE and flash (28, 29) to 32 pins

***Inexpensive*** - Best for less than $200

- Correct implementation of manufacturer specified algorithms for fast, reliable programming.
- Easy to use menu based software has binary editor, read, verify, copy, etc. Free updates via bbs or web.
- Full over current detection on all device power supplies protects against bad chips and reverse insertion.
- Broad support for additional devices using adapters listed below.

**Available Adapters**

| | |
|---|---|
| EP-PIC (16C5x,61,62x,71,84) | $49.95 |
| EP-PIC64 (16C82-5,72-4) | $39.95 |
| EP-PIC12 (12C50x) | $39.95 |
| EP-PIC17 (17C4x) | $49.95 |
| EP-51 (8751,C51) | $39.95 |
| EP-11E (68HC11 E/A) | $59.95 |
| EP-11D (68HC711D3) | $39.95 |
| EP-16 (16bit EPROMS) | $49.95 |
| EP-Z8 (Z86E02,3,4,6,7,8) | $39.95 |
| EP-SEE2 (93x,24x,25x,85x) | $39.95 |
| EP-750 (87C750,1,2) | $59.95 |
| EP-PEEL (ICT22v10,18v8) | $59.95 |
| EP-1051 (89C1051,2051) | $39.95 |
| EP-PLCC (PLCC EPROMs) | $49.95 |
| EP-SOIC (SOIC EPROMs) | $49.95 |
| EP-TSOP (TSOP EPROMs) | $59.95 |

Many Other Adapters Available

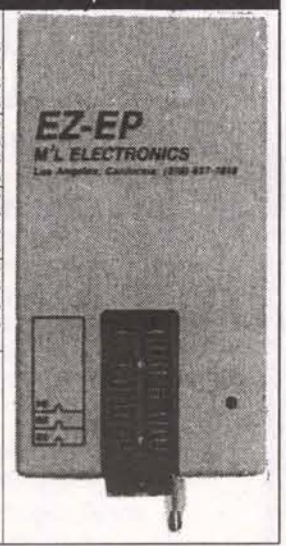


***M²L Electronics***
970/259-0555
Fax:970/259-0777
250 CR 218
Durango, CO 81301
CO orders please add 7% sales tax.
*http:/www.m2l.com*

**Catch The Bus**

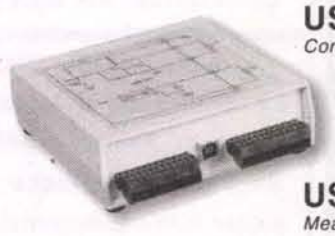

**USB Relay Module**
*Control 8 to 16 "form C", 1 Amp relays*

**USB Opto Module**
*8 to 32 opto-isolated Inputs and Outputs*

**USB Digital Module**
*Industry standard 50 pin interface*

**USB Temperature Module**
*Measures temperature over multiple remote sensors*

***J-Works, Inc***
12328 Gladstone St., Unit 4
Sylmar, CA 91342
(818) 361-0787 Voice
(818) 270-2413 Fax

*Visit our Web site for free information on all our products*
***http://www.j-works.com***
***E-mail sales@j-works.com***



Write in 29 on Reader Service Card.

Write in 30 on Reader Service Card.

# Using the P-I-N Diode

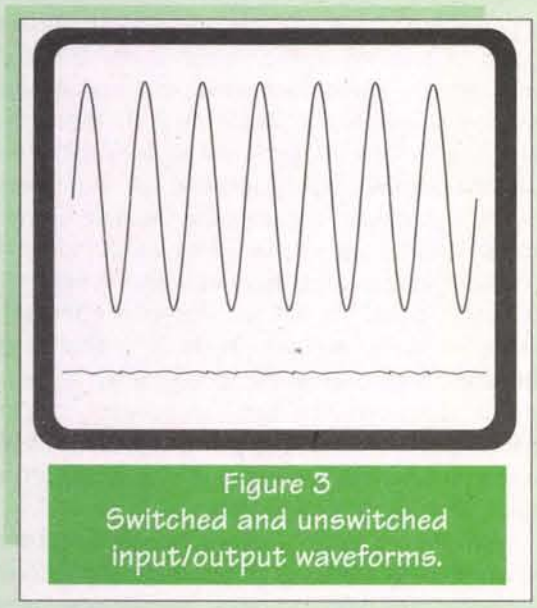

Figure 3
Switched and unswitched input/output waveforms.

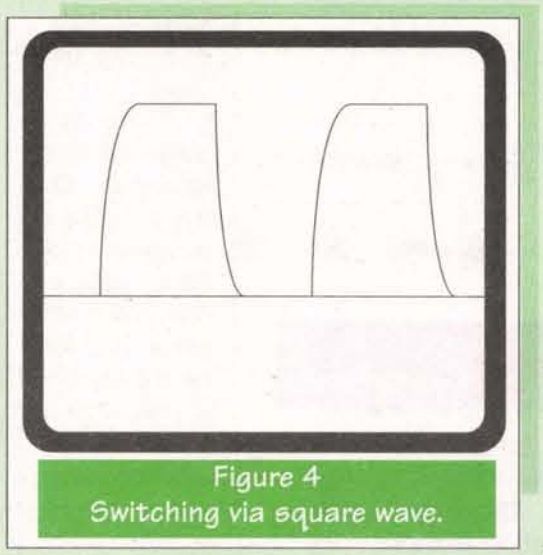

Figure 4
Switching via square wave.

to come by is the MPN3404, which uses the TO-92 plastic package style shown in Figure 1C.

Radio frequency AC signals can pass through the PIN device and, in fact, see it under some circumstances as merely a parallel plate capacitor. We can use PIN diodes as electronic switches for RF signals, as an RF delay line or phase-shifter, or as an amplitude modulator.

## PIN Diode Switch Circuits

PIN diodes can be used as switches in either series or parallel modes. Figure 2 shows two similar switch circuits. In the circuit of Figure 2A, the diode (D1) is placed in series with the signal line. When the diode is turned on, the signal path has a low resistance, and when the diode is turned off it has a very high resistance (thus providing the switching action). When switch S1 is open, the diode is unbiased so the circuit is open by virtue of the very high series resistance. But when S1 is closed, the diode is forward biased and the signal path is now a low resistance. The ratio of off/on resistances provides a measure of the isolation provided by the circuit. A pair of radio frequency chokes (RFC1 and RFC2) are used to provide a high impedance to RF signals, while offering low DC resistance. Figure 2B is similar to Figure 2A except that the RF chokes are deleted, and a resistor is added.

Figure 3 shows a test that I performed on the circuit of Figure 2B using a 455 KHz IF signal (the 'scope was set to show only a few cycles of the 455 KHz). The upper oscilloscope trace in Figure 3 shows the "ON" position where +12 VDC was connected through switch S1 to the PIN diode's current limiting resistor. This signal is 1,200 mV peak-to-peak. The lower trace in Figure 3 shows the same signal when the switch was "OFF" (i.e., +12 VDC disconnected), but with the oscilloscope set to the same level. It appears to be a straight line. Increasing the sensitivity of the 'scope showed a level of 12 mV getting through. This means that this simplest circuit provides a 100:1 on/off ratio, which is 40 dB of isolation. [Note: For this experiment, the ECG-555 and NTE-555 hot carrier PIN diodes were used].

Figure 4 shows the same switch when a squarewave is used to drive the PIN diode control voltage line, rather than +12 volts DC. This situation is analogous to a CW keying waveform. The photo represents one on/off cycle. With the resistor and capacitor values shown, there is a pronounced switching transient present.

Figure 5 shows the circuit for a shunt PIN diode switch. In this case, the diode is placed across the signal line, rather than in series with it. When the diode is turned off, the resistance across the signal path is high, so operation of the circuit is unimpeded. But when the diode is turned on (S1 closed), a near-short-circuit is placed across the line. This type of circuit is turned off when the diode is forward biased. This action is in contrast to the series switch in which a forward biased diode is used to turn the circuit on.

A combination series-shunt circuit is shown in Figure 6. In this circuit, D1 and D2 are placed in series with the signal line, while D3 is in parallel with the line. D1 and D2 will turn on with a positive potential applied, while D3 turns on when a negative potential is applied. When switch S1 is in the "ON" position, a positive potential is applied to the junction of the three diodes. As a result, D1 and D2 are forward biased and thus take on a low resistance. At the same time, D3 is hard reverse biased, so has a very high resistance. Signal is passed from input to output essentially unimpeded (most PIN diodes have a very low series resistance).

But when S1 is in the off position, the opposite situation occurs. In this case, the applied potential is negative so D1/D2 are reverse biased (and take on a high series resistance), while D3 is forward biased (and takes on a low series resistance). This circuit action creates a tremendous attenuation of the signal between input and output.

## Other PIN Diode Applications

PIN diodes can be used as either a variable resistor or as an electronic switch for RF signals. In the latter case,

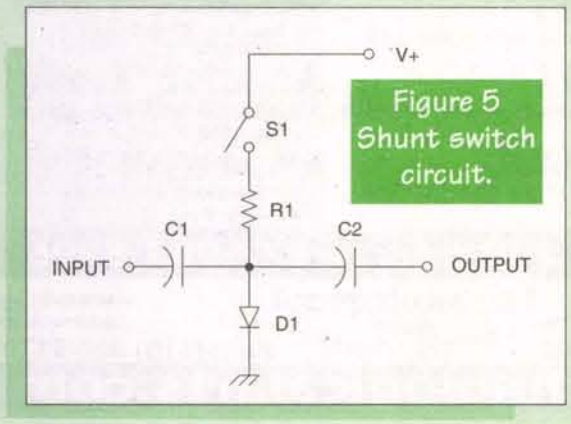


Figure 5
Shunt switch circuit.

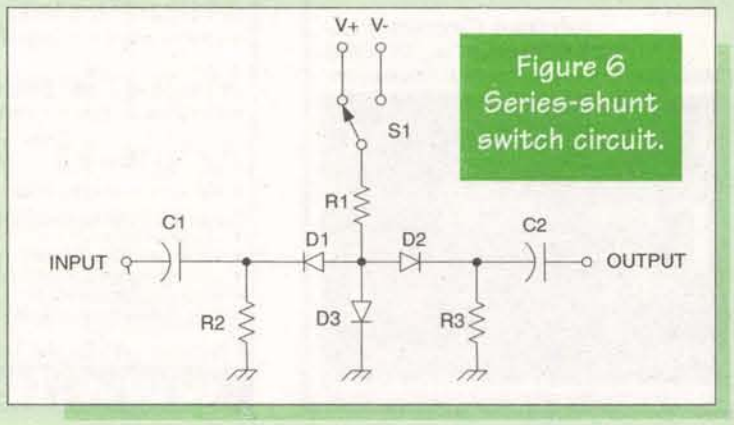


Figure 6
Series-shunt switch circuit.


2 Great Books by Joseph Carr

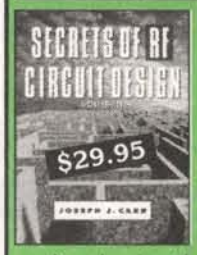


**SECRETS OF RF CIRCUIT DESIGN**

From one of today's most respected electronics authors comes this pragmatic, intermediate-level guide to designing, building, and testing all types of radio frequency circuits. Filled with functional projects that demonstrate the principles of RF circuits, this revision of a bestseller also provides a handy parts list and sources of components.

**PRACTICAL ANTENNA HANDBOOK**

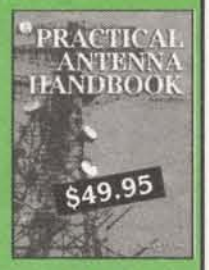


The most popular book on antennas ever written, widely known as "the antenna builder's bible."

This *Third Edition* is a work for anyone with an interest in antennas, from the newest of novices to the most experienced engineer. This empowering book gives you all kinds of projects and material that explains why what you did works.

New Book!

**"PRACTICAL ELECTRONICS FOR INVENTORS"**

Written by Paul Scherz, an inventor and electrical hobbyist, this reference provides beginning hobbyists and inventors with an intuitive grasp of the theoretical and practical aspects of electronics — just the kind of insight you need to get your projects up and running.

**Order Today From The Nuts & Volts Bookstore**

Send check or money order to Nuts & Volts, 430 Princeland Court, Corona, CA 92879. Include a complete shipping address (no P.O. Boxes, please). Shipping & handling $4.50. CA residents add 7.75% sales tax. Or, call our toll-free order-only line at 1-800-783-4624 and use your MasterCard or Visa. *ALL ORDERS MUST BE PREPAID.*

As a paid subscriber to *Nuts & Volts*, you'll receive 10% off the list price!!

*(See page 50 for other titles currently available.)*

# Using the P-I-N Diode

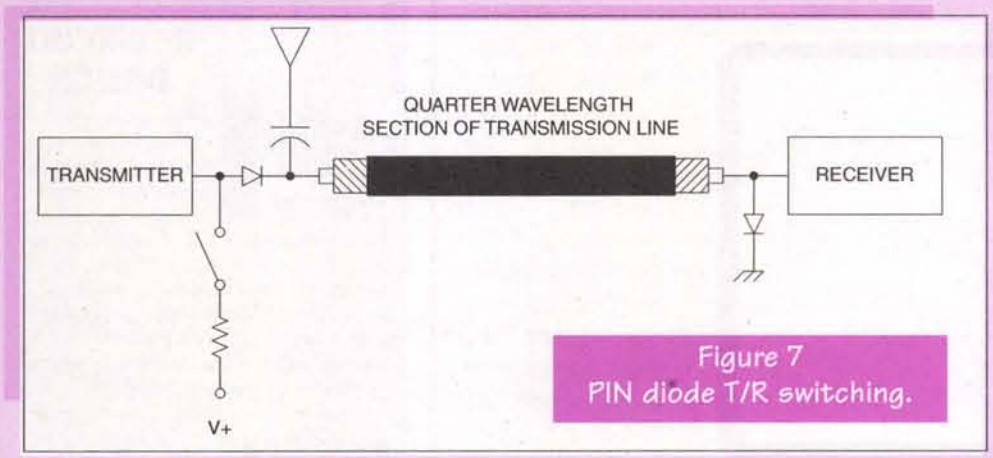


Figure 7
PIN diode T/R switching.

the diode is basically a two-valued resistor with one value being very high and the other being very low. These characteristics open several possible applications.

When used as a switch, PIN diodes can be used to switch devices such as attenuators, filters, and amplifiers in and out of the circuit. It has become standard practice in modern radio equipment to switch DC voltages to bias PIN diodes rather than directly switch RF/IF signals. In some cases, the PIN diode can be used to simply short out the transmission path to bypass the device.

The PIN diode will also work as an amplitude modulator. In this application, a PIN diode is connected across a transmission line, or inserted into one end of a piece of microwave waveguide. The audio modulating voltage is applied through an RF choke to the PIN diode. When a CW signal is applied to the transmission line, the varying resistance of the PIN diode causes the signal to be amplitude modulated.

Another application is shown in Figure 7. Here we have a pair of PIN diodes used as a transmit-receive (TR) switch in a radio transmitter; models from low-HF to microwave use this technique. Where you see a so-called "relayless TR switch," it is almost certain that a PIN diode network such as Figure 7 is in use. When switch S1 is open, diodes D1 and D2 are unbiased, so present a high impedance to the signal. Diode D1 is in series with the transmitter signal, so blocks it from reaching the antenna; diode D2, on the other hand, is across the receiver input so does not attenuate the receiver input signal at all. But when switch S1 is closed, the opposite situation occurs: both D1 and D2 are now forward biased. Diode D1 is now a low resistance in series with the transmitter output signal, so the transmitter is effectively connected to the antenna. Diode D2 is also a low resistance, and is across the receiver input so causes it to short out. The isolation network can be either a quarter wavelength transmission line, microstrip line designed into the printed circuit board, or an LC pi-section filter.

Transmitters up to several kilowatts have been designed using this form of switching, and almost all current VHF/UHF portable "handi-talkies" use PIN diode switching. Higher power circuits require larger diodes than were discussed here, but they are easily available from industrial distributors.

Figure 8A shows how multiple IF bandpass filters are selected with only DC being routed around the cabinet between circuitry and front panel. A set of input and output PIN diode switches are connected as shown, and fed with a switch that selects either 0 VDC or +12 VDC alternately. When

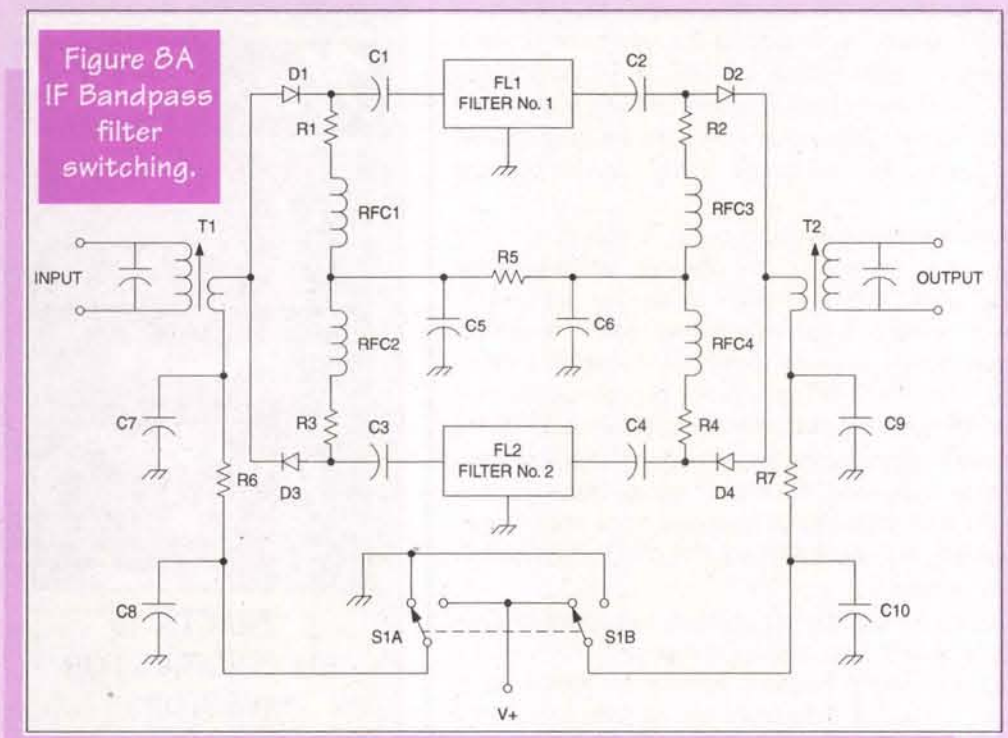


Figure 8A
IF Bandpass filter switching.

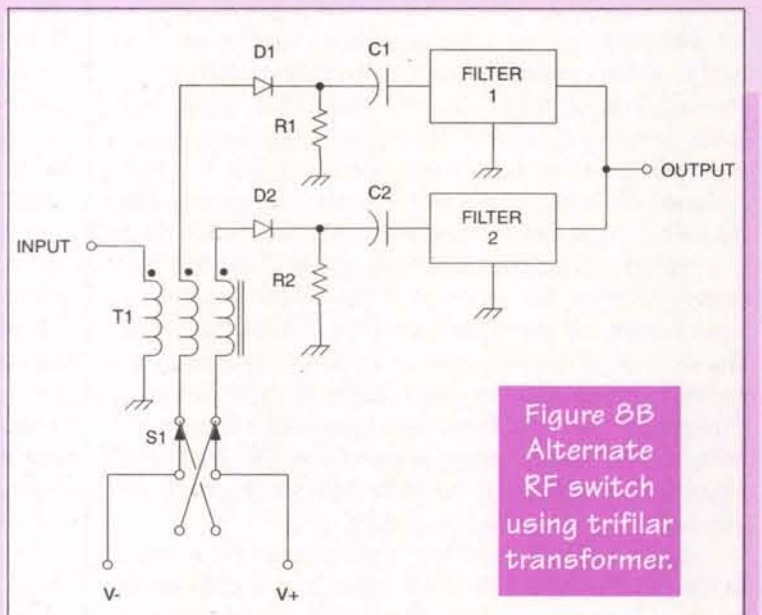


Figure 8B
Alternate RF switch using trifilar transformer.


## ON SCREEN DISPLAY- CHARACTER OVERLAY BOARD

Need to display more text than your LCD module can handle? OSD-232 is the solution! From any RS-232 serial source like a PC or Basic Stamp, display 28 columns by 11 rows of information (308 characters total) directly onto any NTSC or optional PAL baseband (video in) television or VCR. OSD-232 can overlay monochrome text onto an incoming video source or display colored text on a self-generated colored background screen.

**OSD-232 $99.00**
We accept Visa and Mastercard.

**Intuitive Circuits, LLC**
2275 Brinston • Troy, MI 48083
(248) 524-1918 • http://www.icircuits.com

OSD-232 on board a radio controlled airplane

An OSD-232 video game programmed in BASIC

## 68HC11 & 68HC12 Microcontroller Modules!

*Unique design-- just plug them right into your solderless breadboard!*

**MicroStamp11™**
• tiny 1-inch x 1.4-inch 68HC11 module from $49

**MicroCore-11™**
• compact 2-inch x 2-inch 68HC11 module from $68

**Adapt-11™ Family**
• 68HC11 modules with lots of I/O lines from $63

**Adapt812™ Family**
• based on 68HC812A4
• from $79

**Adapt912™ Family**
• choice of B32, D60, DG128
• from $99

**MicroBDM912™**
• lowest-cost BDM pod!
• only $79!

Application Cards Available:
• stepper motor driver
• voice record/playback
• LCD/keypad/PC keyboard
• data acquisition • DAC
• CAN • ethernet • more!

Toll-free: 1-877-963-8996
Technological Arts
Visa•MasterCard Discover•Amex
Phone: (416) 963-8996 Fax: (416) 963-9179
www.technologicalarts.com




Write in 31 on Reader Service Card.

# Using the P-I-N Diode

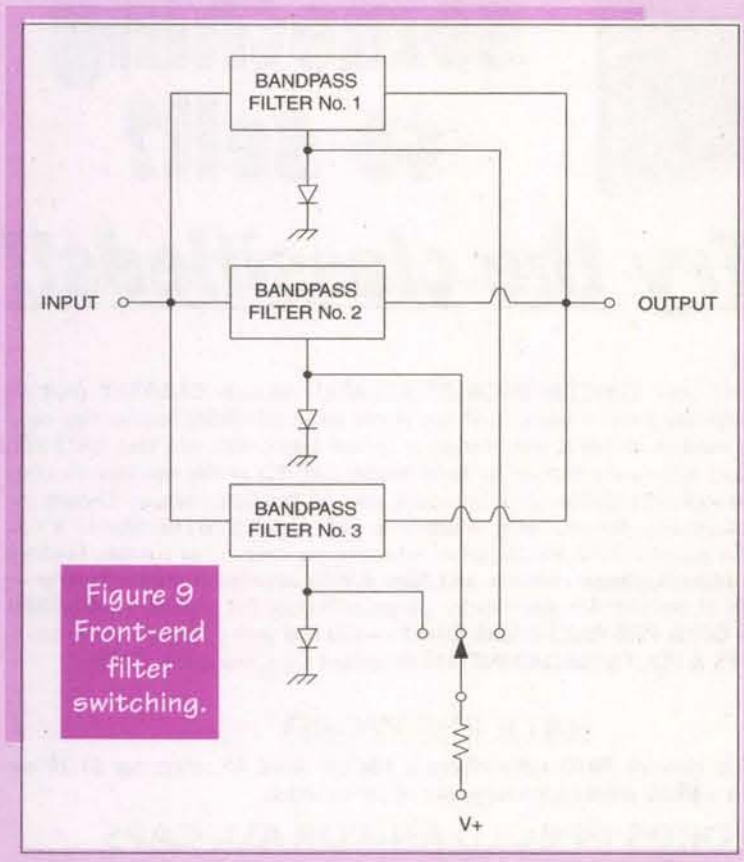


Figure 9
Front-end filter switching.

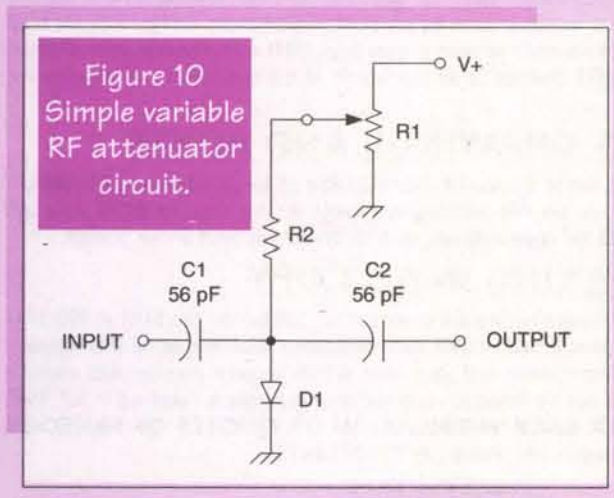


Figure 10
Simple variable RF attenuator circuit.

the switch is in opposite to the position shown, the +12 goes to the filter no. 1 switch, so filter no. 1 is activated. When the switch is in the opposite position, the alternate filter is turned on. This same arrangement can be used in the front-end of the receiver, or the local oscillator, to select L-C components for different bands.

An alternate two-way RF switch is shown in Figure 8B. This circuit uses four PIN diodes and a three-winding, trifilar wound transformer. Several different forms of trifilar wound transformer are on the market, but you can also build your own using a toroid core. To be trifilar wound, one must wind all three lengths of wire together (some actually twist them together). The core material and the number of windings depends on the operating frequency. For frequencies in the HF (3,000 to 30,000 KHz) region, use either T-37-2, T-37-6, T-50-2, or T-50-6 cores. For frequencies less than 2,000 KHz, use the T-37-15 or T-50-15 cores.

Another filter selection method is shown in Figure 9. The entire circuit differs from this variant in that a total of six filter sections are used rather than just three, as shown in Figure 9. In each bandpass filter (BPF1 and BPF2), a network of inductor and capacitor elements are used to set the center and both edge frequencies of the band to be covered.

The circuit of Figure 9 is shown using a switch to apply or remove the +12 VDC bias potential on the diodes, but in the actual receiver, this potential is digitally controlled. The digital logic elements sense which of 30 bands are being used, and selects the input RF filter accordingly.

## PIN Diode Attenuators

Another application for PIN diodes is as a voltage-variable attenuator in RF circuits. Because of its variable resistance characteristic, the PIN diode can be used in a variety of attenuator circuits. One of the simplest is the shunt attenuator of Figure 10. The front-end of this circuit is a bank of selectable bandpass filters per Figure 9, so we will not dwell on that topic now. But at the output of the filter bank, there is shunted from the signal line to ground, a series combination of a capacitor (C1) and a PIN diode (D1).

The PIN diode acts like an electronically variable resistor. The resistance across the diode's terminals is a function of the applied bias voltage. This voltage – hence the degree of attenuation of the RF signal – is proportional to the setting of potentiometer R1. The series resistor (R2) is used to limit the current when the diode is forward biased. This step is necessary because the diode becomes a very low resistance when a certain rather low potential is exceeded. This circuit is used as an RF gain control on some modern receivers.

Another PIN diode attenuator circuit is shown in Figure 11. This is the "bridge-Tee" attenuator. It is capable of providing a 10-dB attenuation range over a very wide bandwidth.

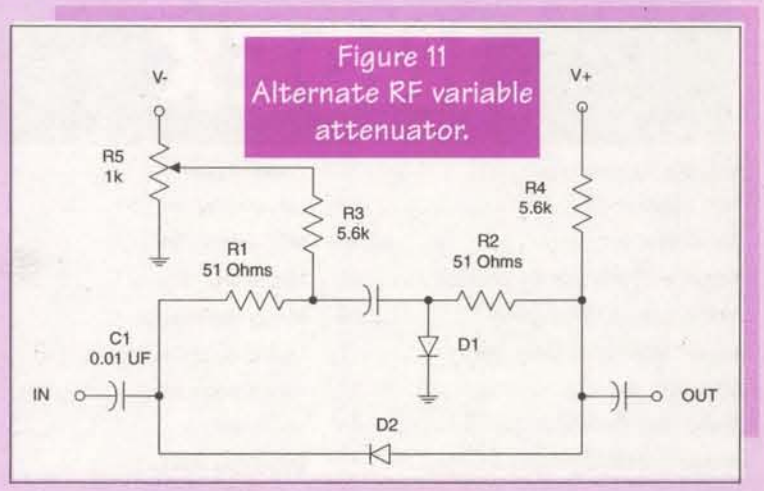


Figure 11
Alternate RF variable attenuator.

## Conclusion

PIN diodes are one of those components that are little known, but nonetheless very useful. If you build any RF projects that could involve traditional switching, then you will probably find the PIN diode makes a dandy substitute that avoids the problems associated with routing signal around switching circuits. Try it, you'll like it. **NV**

**Connections ...**
**I can be reached by snail mail at P.O. Box 1587, Annandale, VA 22003 *(NEW ADDRESS!)*, or via E-Mail at CARRJJ@AOL.COM.**

Celebrating our 17th Year Of Service !!

**COLLIMATING LENS**
This economical collimating lens assembly consists of a black anodized aluminum barrel that acts as a heat sink, and a glass lens with a focal point of 7.5mm. Designed to fit standard 9mm laser diodes. Simply place diode in the lens assembly, adjust beam to desired focus, then set with adhesive.

| STOCK# | 1-9 | 10-24 | 25+ |
|---|---|---|---|
| LSLENS Lens Assembly | 24.99 | 23.74 | 21.37 |

**DIODE/TRANSISTOR TESTER KIT**
This dynamic tester allows checking of transistors & diodes in circuit. Identifies NPN or PNP transistors. Checks all types, small or large power. Identifies anode or cathode of diodes.

| STOCK# | 1-9 | 10-24 | 25+ |
|---|---|---|---|
| DT100K | 24.99 | 23.74 | 21.37 |

**ANTI-STATIC FOAM CLEANER**
A thick, foaming cleaner for use in static sensitive applications. Safe for plastics and fiberglass. Use on computer cases and all office equipment. Also cleans soft fabrics. 5 oz. aerosol can.

| STOCK# | 1-9 | 10-24 | 25+ |
|---|---|---|---|
| SB1102 | 1.99 | 1.89 | 1.70 |

**EPROMS**

| STOCK# | 1-24 | 25-99 | 100+ |
|---|---|---|---|
| 2716 | 2.99 | 2.84 | 2.56 |
| 2732 | 4.49 | 4.27 | 3.84 |
| 2732A-20 | 5.49 | 5.22 | 4.70 |
| 2764-20 | 5.39 | 5.12 | 4.61 |
| 2764-25 | 4.49 | 4.27 | 3.84 |
| 2764A-20 | 3.49 | 3.32 | 2.99 |
| 2764A-25 | 2.99 | 2.84 | 2.56 |
| 27C64-15 | 2.99 | 2.84 | 2.56 |
| 27256-15 | 4.79 | 4.55 | 4.10 |
| 27C256-15 | 2.99 | 2.84 | 2.56 |
| 27512-25 | 3.09 | 2.94 | 2.65 |
| 27C512-25 | 2.99 | 2.84 | 2.56 |
| 27C010-15 | 2.79 | 2.65 | 2.39 |
| 27C020-15 | 3.49 | 3.32 | 2.99 |
| 27C040-12 | 5.49 | 5.22 | 4.70 |
| 27C080-12 | 10.99 | 10.44 | 9.40 |

**Popular I.C.'s**

| STOCK# | 1-24 | 25-99 | 100+ |
|---|---|---|---|
| 7400 | .39 | .37 | .33 |
| 74LS00 | .19 | .18 | .16 |
| 4017 | .29 | .28 | .25 |
| 7805T | .33 | .31 | .28 |
| 7812T | .33 | .31 | .28 |
| LM317T | .49 | .47 | .42 |
| LM386N-1 | .33 | .31 | .28 |
| NE555N | .24 | .23 | .21 |
| LM741N | .24 | .23 | .21 |
| NE5532N | .55 | .52 | .47 |
| 68HC705C8P | 8.99 | 8.54 | 7.69 |
| 8749 | 17.99 | 17.09 | 15.38 |
| 62256LP-10 | 2.79 | 2.65 | 2.39 |
| 2816 | 2.79 | 2.65 | 2.39 |

**FM MICROPHONE KIT**
Transmit your voice on any FM radio. Range up to 1000'. Case included

| STOCK# | 1-9 | 10-24 | 25+ |
|---|---|---|---|
| K30 | 15.99 | 15.19 | 13.67 |

**What Do We Have ?**
- I.C.'s
- Oscillators
- Crystals
- Diodes
- Tools
- Laser Diodes
- Vises
- Resistors
- Capacitors
- Connectors
- Trimpots
- Kits
- Vises
- LED's
- Transistors
- And more!

**GADGETEER'S GOLDMINE**
This exciting collection of electronic projects features experiments ranging from magnetic levitation and lasers to high-tech surveillance and digital communications.
• By Gordon McComb

| STOCK# | 1-9 | 10-24 | 25+ |
|---|---|---|---|
| TB3360 | 24.99 | 23.74 | 21.37 |

• Order Line — (800) 824-3432 • International — (724) 495-1230 • Fax Orders — (724) 495-7882
• Technical Support — (724) 495-1231 • No Minimum Order – (Orders under $20 subject to $ 5 charge) •UPS 3 day, Blue, Red, & Fed. Ex. Shipping Available (Call for charges) • PA Res. Add 7 % Sales Tax •Open Mon-Fri 9:00 AM - 5:00 PM (EST) • Corporate Accounts / Quantity Discounts Available •We accept M/C, VISA, Discover & American Express with no surcharge • Call For FREE Catalog ($2.00 Outside U.S.)
• We Carry A Complete Line Of Electronic Components • Email - unielect @ aol.com
Visit us on the web ! www.unicornelectronics.com

FREE SHIPPING!! on pre-paid orders

**Unicorn Electronics**
**1142 State Route 18**
**Aliquippa, PA 15001**

Write in 32 on Reader Service Card.

# ADVERTISER INDEX


Abacom Technologies ....17
ACP Superstore ....62
ActiveWire, Inc. ....76
Advanced Transdata Corporation ....41
All Electronics Corporation ....59
Allison Technology Corporation ....27
Alltronics ....57
Andromeda Research ....54
Antique Radio Classified ....77
AWC ....18
Baylin Publications ....51
Bilocon Corp. ....77
BNC/Telulex Div. ....13
C & S Sales, Inc. ....31
C and H Sales Company ....14
Carl's Electronics ....11
CCTV Outlet ....7
CEI Cable Wholesalers ....28
Chicago Circuits Corporation ....74
C.I.E. ....19
Circuit Specialists, Inc. ....94
Communications Surplus ....77
Corporate Systems Center ....2, 95
Cunard Associates ....62
Decade Engineering ....76
Demar Electronics ....76
DesignNotes.com ....60
Digital Products Company ....76
Earth Computer Technologies ....53
ECD ....76
EDS ....61
E.H. Yost & Co. ....11
Electro Mavin ....89
Electro Science Applications ....77
Electronix Corp. ....51
Electronix Express ....19
EMAC, Inc. ....71
EPS ....77
ExpressPCB ....74
Fair Radio Sales Co. ....23
Foss Warehouse Distributors ....77
Gateway Electronics, Inc. ....40
General Device Instruments ....77
GetToner.com ....76
Globaltech Distributors ....76
Graymark ....45
Halted Specialties Co. ....3
H.T. Orr Computer Supplies ....53
Information Unlimited ....33
Inkjet Southwest ....58
Intronics, Inc. ....61
Intuitive Circuits LLC ....80
Jam RF ....62
J-Works, Inc. ....78
La Paz Electronics International ....75
Lemos International Co., Inc. ....27
Levy Latham ....72
Linear Systems ....17
Lynxmotion, Inc. ....54
M2L Electronics ....78
Matco, Inc. ....76-77
Matrix Multimedia ....91
Metric Equipment Sales, Inc. ....55
microEngineering Labs ....17
Micromint ....71
Milestone Products ....26
Miller Engineering ....76
Motron ....22
Mr. Nicd ....11
MVS ....60
Netcom ....15
Parallax, Inc. ....Back Cover
PCB Express, Inc. ....77
Picard Industries ....90
Pioneer Hill Software ....26
Polaris Industries ....21
Power Quality, Inc. ....75
Prairie Digital, Inc. ....77
Price Surveillance ....76
Privacy Electronics ....62
Pulsar, Inc. ....23
Quality Kits ....76
Ramsey Electronics, Inc. ....39
Ray's Robotic Racers ....72
R.E. Smith ....76
Resources Un-Ltd. ....24
Roger's Systems Specialist ....30
Saelig Company ....14
Scott Edwards Electronics, Inc. ....28
Seabird Technical ....77
Securetek ....77
Shreve Systems ....35
Sinaco Electronics ....75
Skycraft Parts & Surplus, Inc. ....61
Square 1 Electronics ....70
SuperCircuits ....47
Surplus Traders ....75
Techniks, Inc. ....76
Technological Arts ....80
Ten-Tec Inc. ....42
Test Equipment Connection ....56
The End Connection ....77
The RF Connection ....91
Timeline ....41
Unicorn Electronics ....81
USI Corp. ....70
V&V Mach. & Equipment, Inc. ....76-77
Vesta Technology, Inc. ....76
Viking Systems International ....22
Visitect, Inc. ....56
Weeder Technologies ....89
Western Test Systems ....36-37
Worldwyde ....76-77

# Got something to sell?

## Try the classifieds!!

TYPE or PRINT your **ELECTRONICALLY RELATED** ad copy **CLEARLY (not all caps)** on a separate piece of paper. Spell out words when submitting handwritten copy. Calculate the number of words and multiply it by the appropriate rate (see RATE PER WORD section). Include any charges for **bold** and/or CAPPED words, any artwork costs that would be applicable, and/or costs for boxing your ad (explained below). Choose the appropriate classification for your ad(s) to appear in (see below). If no classification is indicated, it will be placed in Misc. Electronics or wherever we deem most suitable. **Enclose your name, address, phone number, and *Nuts & Volts* account number from your mailing label** (if available) for identification purposes. Include full payment — **CLASSIFIEDS RUN ON A PRE-PAID BASIS ONLY** — and mail your completed order to:
**NUTS & VOLTS MAGAZINE**, 430 Princeland Ct., Corona, CA 92879.

## RATE PER WORD

The ad rate for **current PAID subscribers** is **60¢** per word. All others pay **$1.20** per word. There is a **$9.00 minimum** charge per ad per insertion.

## WORDS IN BOLD AND/OR ALL CAPS

Words to be set in **bold** or CAPS are each 10¢ extra PER WORD. **BOLD CAPS** are 20¢ extra per word. The first two words of each ad are bold capped at no charge. Indicate bold words by underlining. Words normally written in caps (e.g., IBM) and accepted abbreviations such as VAC or MHz are NOT charged as all cap words. Use a two-letter abbreviation for states.

## PHOTOS, DRAWINGS, AND BOXES

A photo or drawing may be run at the top of your classified ad for an additional **$10.00** (1" depth max.) for camera-ready art. No wording is allowed in this area. To **BOX** your ad, include an additional **$50.00** for copy-only ads, or **$75.00** for ads with art or photos.

## FAXING IN AD COPY

You may fax in ad copy or changes before the closing date (5:00pm on the **5th**) at 909-371-3052 using MasterCard or Visa. Include credit card expiration date, the name that appears on the card, a daytime phone number, and your *Nuts & Volts* account number. Ads without credit card information will not be listed as received until payment is received in full. **WE DO NOT CALL OR FAX BACK VERIFICATION OR QUOTES OF FAXED-IN ADS.** For verification of faxed-in ads, please call 909-371-8497.

## DEADLINE

Prepaid ads received by 5:00pm on the **closing date (5th of the month)** will appear in the following month's issue. Ads postmarked through the **5th**, but received after the closing date, will be placed in the next available issue. No cancellations or changes after the 5th. Cancellations and changes must be submitted in writing.

## IMPORTANT INFORMATION

All classified ads are running copy only. No special positioning, centering, dot leaders, extra space, etc. is allowed. All advertising in *Nuts & Volts* is limited to **electronically related items ONLY**. All ads are subject to approval by the publisher. We reserve the right to reject or edit any ad submitted. We do not take ad copy or changes over the phone. We do not bill for classified ads. Repeat ads or ads run in multiple classifications within the same issue are allowed. Paid subscribers may run ads at the 60¢ rate only through their subscription expiration date. **NO REFUNDS**. Credit only. No credit for typesetting errors will be issued unless you *clearly* print or type your ad copy.

***Choose a category for your ad from the classifications listed below.***

10. Ham Gear For Sale
20. Ham Gear Wanted
30. CB/Scanners
40. Music & Accessories
50. Computer Hardware
60. Computer Software
70. Computer Equipment Wanted
80. Test Equipment
85. Security
90. Satellite Equipment
95. Military Surplus Electronics
100. Audio/Video/Lasers
110. Cable TV
115. Telephone/Fax
120. Components
125. Microcontrollers
130. Antique Electronics
135. Aviation Electronics
140. Publications
145. Robotics
150. Plans/Kits/Schematics
155. Manuals/Schematics Wanted
160. Misc. Electronics For Sale
170. Misc. Electronics Wanted
175. BBS & Online Services
180. Education
190. Business Opportunities
200. Repairs/Service

# Product/Category INDEX

Find what you need FAST

## AMATEUR RADIO & TV


Alltronics ..... 57
Communications Surplus ..... 77
Decade Engineering ..... 76
Gateway Electronics, Inc. ..... 40
Lemos International Co., Inc. ..... 27
Motron ..... 22
Ramsey Electronics, Inc. ..... 39
Ten-Tec Inc. ..... 42
The RF Connection ..... 91


## ASSEMBLY SERVICES


Bilocon Corp. ..... 77


## BATTERIES/CHARGERS


Cunard Associates ..... 62
E.H. Yost & Co. ..... 11
Globaltech Distributors ..... 76
Mr. NiCd ..... 11
Power Quality, Inc. ..... 75


## BUSINESS OPPORTUNITIES


C and H Sales Company ..... 14
Earth Computer Technologies ..... 53
Metric Equipment Sales, Inc. ..... 55
Roger's Systems Specialist ..... 30
Skycraft Parts & Surplus, Inc. ..... 61
Timeline ..... 41


## CABLE TV


CEI Cable Wholesalers ..... 28
Foss Warehouse Distributors ..... 77
Worldwyde ..... 76-77


## CB/SCANNERS


USI Corp. ..... 70


## CCD CAMERAS/VIDEO


CCTV Cable Outlet ..... 7
Circuit Specialists, Inc. ..... 94
Decade Engineering ..... 76
Matco, Inc. ..... 76-77
Polaris Industries ..... 21
Ramsey Electronics, Inc. ..... 39
Resources Un-Ltd. ..... 24
Seabird Technical ..... 77
Securetek ..... 77
SuperCircuits ..... 47
Timeline ..... 41
USI Corp. ..... 70


## CIRCUIT BOARDS


Chicago Circuits Corporations ..... 74
Cunard Associates ..... 62
ECD ..... 76
ExpressPCB ..... 74
PCB Express, Inc. ..... 77
Pulsar, Inc. ..... 23
V&V Mach. & Equipment, Inc. ..... 76-77


## COMPONENTS


Chicago Circuits Corporation ..... 74
Communications Surplus ..... 77
ECD ..... 76
Electronix Express ..... 19
EPS ..... 77
La Paz Electronics International ..... 75
Linear Systems ..... 17
Pulsar, Inc. ..... 23
Sinaco Electronics ..... 75
Skycraft Parts & Surplus, Inc. ..... 61
Unicorn Electronics ..... 81
Visitect, Inc. ..... 56


## COMPUTER

### Hardware


ActiveWire, Inc. ..... 76
Allison Technology Corp. ..... 27
Corporate Systems Center ..... 2, 95
Earth Computer Technologies ..... 53
Electro Mavin ..... 89
General Device Instruments ..... 77
Halted Specialties Co. ..... 3
La Paz Electronics International ..... 75
Roger's Systems Specialist ..... 30
Shreve Systems ..... 35
Techniks, Inc. ..... 76
The End Connection ..... 77


### Software


Electro Science Applications ..... 77
Electronix Corp. ..... 51
Globaltech Distributors ..... 76
Matrix Multimedia ..... 91
Pioneer Hill Software ..... 26


### Microcontrollers / I/O Boards


Abacom Technologies ..... 17
Advanced Transdata Corporation ..... 41
AWC ..... 18
EMAC, Inc. ..... 71
Intuitive Circuits LLC ..... 80
La Paz Electronics International ..... 75
microEngineering Labs ..... 17
Micromint ..... 71
MVS ..... 60
Parallax, Inc. ..... Back Cover
Prairie Digital, Inc. ..... 77
Ray's Robotic Racers ..... 72
R.E. Smith ..... 76
Scott Edwards Electronics, Inc. ..... 28
Square 1 Electronics ..... 70
Technological Arts ..... 80
Vesta Technology, Inc. ..... 76
Worldwyde ..... 76-77


### Printers/Printer Supplies


GetToner.com ..... 76
H.T. Orr Computer Supplies ..... 53
Inkjet Southwest ..... 58


## DESIGN/ENGINEERING SERVICES


Bilicon Corp. ..... 77
Chicago Circuits Corp. ..... 74
DesignNotes.com ..... 60
Electro Science Applications ..... 77
ExpressPCB ..... 74
Prairie Digital, Inc. ..... 77
Pulsar, Inc. ..... 23
V&V Mach. & Equipment, Inc. ..... 76-77


## EDUCATION


C.I.E. ..... 19
EMAC, Inc. ..... 71
Matrix Multimedia ..... 91


## EVENTS/SHOWS


ACP Superstore ..... 62


## KITS


Alltronics ..... 57
C & S Sales, Inc. ..... 31
Digital Products Company ..... 76
Earth Computer Technologies ..... 53
Electronix Express ..... 19
EMAC, Inc. ..... 71
Gateway Electronics, Inc. ..... 40
Information Unlimited ..... 33
Inkjet Southwest ..... 58
Miller Engineering ..... 76
Quality Kits ..... 76
Ramsey Electronics, Inc. ..... 39
Scott Edwards Electronics, Inc. ..... 28
Ten-Tec Inc. ..... 42
USI Corp. ..... 70
Weeder Technologies ..... 89
Worldwyde ..... 76-77


## LASERS


Information Unlimited ..... 33
Resources Un-Ltd. ..... 24
Unicorn Electronics ..... 81


## MISC./SURPLUS


All Electronics Corporation ..... 59
C and H Sales Company ..... 14
Communications Surplus ..... 77
Demar Electronics ..... 76
EPS ..... 77
Fair Radio Sales Co. ..... 23
Gateway Electronics, Inc. ..... 40
GetToner.com ..... 76
Halted Specialties Co. ..... 3
Jam RF ..... 62
Levy Latham ..... 72
Linear Systems ..... 17
PCB Express, Inc. ..... 77
Picard Industries ..... 90
Power Quality, Inc. ..... 75
Resources Un-Ltd. ..... 24
Shreve Systems ..... 35
Sinaco Electronics ..... 75
Skycraft Parts & Surplus, Inc. ..... 61
Surplus Traders ..... 75
Timeline ..... 41
Unicorn Electronics ..... 81
Viking Systems International ..... 22
Visitect, Inc. ..... 56
Weeder Technologies ..... 89


## PROGRAMMERS


Advanced Transdata Corporation ..... 41
Andromeda Research ..... 54
General Device Instruments ..... 77
Intronics, Inc. ..... 61
M2L Electronics ..... 78
microEngineering Labs ..... 17
Worldwyde ..... 76-77


## PUBLICATIONS


Antique Radio Classified ..... 77
Baylin Publications ..... 51
Netcom ..... 15
Square 1 Electronics ..... 70


## RF TRANSMITTERS/ RECEIVERS


Abacom Technologies ..... 17
Matco, Inc. ..... 76-77
Securetek ..... 77


## ROBOTICS


Lemos International Co., Inc. ..... 27
Lynxmotion, Inc. ..... 54
SuperCircuits ..... 47


## SATELLITE


Baylin Publications ..... 51
Worldwyde ..... 76-77


## SECURITY


CCTV Outlet ..... 7
Decade Engineering ..... 76
Information Unlimited ..... 33
Lemos International Co., Inc. ..... 27
Matco, Inc. ..... 76-77
Motron ..... 22
Polaris Industries ..... 21
Price Surveillance ..... 76
Privacy Electronics ..... 62
Securetek ..... 77
SuperCircuits ..... 47
Visitect, Inc. ..... 56


## SOLAR EQUIPMENT

## STEPPER MOTORS


Alltronics ..... 57


## TELEPHONE


Bilocon Corp. ..... 77
BNC/Telulex Div. ..... 13
Carl's Electronics ..... 11
Digital Products Company ..... 76
Globaltech Distributors ..... 76
Privacy Electronics ..... 62
Weeder Technologies ..... 89


## TEST EQUIPMENT


Allison Technology Corp. ..... 27
BNC/Telulex Div. ..... 13
C & S Sales, Inc. ..... 31
C and H Sales Company ..... 14
Circuit Specialists, Inc. ..... 94
DesignNotes.com ..... 60
Digital Products Company ..... 76
EDS ..... 61
Intronics, Inc. ..... 61
J-Works, Inc. ..... 78
Levy Latham ..... 72
Metric Equipment Sales, Inc. ..... 55
Pioneer Hill Software ..... 26
Power Quality, Inc. ..... 75
Prairie Digital, Inc. ..... 77
Price Surveillance ..... 76
Saelig Company ..... 14
Seabird Technical ..... 77
Test Equipment Connection ..... 56
Western Test Systems ..... 36-37
Worldwyde ..... 76-77


## TOOLS


Advanced Transdata Corporation ..... 41
C & S Sales, Inc. ..... 31
The RF Connection ..... 91
Graymark ..... 45


## WIRE/CABLE & CONNECTORS


Roger's Systems Specialist ..... 30
The RF Connection ..... 91

Questions & Answers

# TECH FORUM

This is a READER TO READER Column. All questions AND answers will be provided by *Nuts & Volts readers* and are intended to promote the exchange of ideas and provide assistance for solving problems of a technical nature. All questions submitted are subject to editing and will be published on a space available basis if deemed suitable to the publisher. All answers are submitted by readers and *NO GUARANTEES WHATSOEVER* are made by the publisher. The implementation of any answer printed in this column may require varying degrees of technical experience and should only be attempted by qualified individuals. Always use common sense and good judgement!

## QUESTIONS

Send all material to **Nuts & Volts Magazine**, 430 Princeland Court, Corona, CA 92879, OR fax to (909) 371-3052, OR E-Mail to **forum@nutsvolts.com**

I have a SRL model 2581 wideband amplifier. Should this be put between the pre-amp and receiver, or should it be put before the pre-amp? Am I using the unit correctly or does it have other applications?

**10001** **Dennis Roberts**
**Buffalo, NY**

I have an IR imaging tube with power supply I picked up from a salvage yard. (Power supply wraps around IR tube.) Unfortunately, the wires from the power supply were broken loose from the IR tube.

Several people have looked at this and said it looks to be in good shape, but could not help on the wiring part.

The unit is approximately 1.75" dia. x 1.125" thick complete.

The two-piece power supply is wrapped around the tube like a blanket with a small section open on one side for the wires to connect. The wire colors are i.e., blue, which is already connected, yellow and red on one side, and red, black, and another black. I believe this is from a pair of ANP-7 night-vision goggles.

The unit is marked on the side of the power supply "Galileo" #'s 3555985, 79-23, 58874, 65093.

I do know that on the goggles, a black and red wire goes to the battery, and a black and red wire goes to a light sensor.

**10002** **Peter A.**
**via Internet**

One of *Nuts & Volt's* advertisers (Ramsey Electronics) features a TV transmitter which can be received by "... any TV tuned to cable channel 59."

What are the differences, if any, between cable channel 59 and TV broadcast channel 59?

**10003** **J. M. Smith**
**via Internet**

Does anyone have ideas on how to make a car error code reader, that could maybe interface with the serial port on a laptop? I have a 1996 Chevy Monte Carlo.

**10004** **Anonymous**
**via Internet**

I am interested in a system that would consist of a solar and autotype battery with a regulator that could be used for running a laptop, small radio, or charging other smaller batteries.

Does somone know of such a system or can someone give me some help in constructing it (i.e., what is needed between the solar panel and battery for charging and between the battery and output)?

This system would be used for outdoor type camping.

**10005** **Steve Hock**
**via Internet**

I have a system that does not have any BIOS settings to allow me to boot without an attached keyboard or to continue boot after errors, etc. I need a way of "fooling" the system into thinking that a keyboard is attached so it will boot. The control app it is running is completely mouse-driven and the keyboard is in the way. This is an ATX system with a PS/2 keyboard port.

**10006** **Wayne O. Wilson, Jr.**
**via Internet**

Okay, how can I use an Optrex DMC 20434 LCD using a Scenix 28-pin microprocessor? I cannot find any data to help me!

**10007** **Daniel**
**via Internet**

Does someone know where I can obtain a stereo IC part number STK2028?

**10008** **Bob Brockett**
**Harrison Twp., MI**

Does anyone have an idea for a circuit to build an inexpensive satellite finder? This device should be able to work on C-band and Direct TV types of equipment.

**10009** **Ken Peck**
**via Internet**

I need a pinout with functions for a TMS 3450 NL TI clock chip.

**100010** **Edwin Smith**
**via Internet**

I would like to equip a model police car with strobe lights like real ones.

My idea is to make a lightbar with superbright LEDs that would flash alternately with a cadence of four rapid flashes for the left and four rapid flashes for the right.

Would it be easier to use recovery flash units? Are any schematics available?

**100011** **Patrick Montaron**
**via Internet**

## ANSWERS

**ANSWER TO #8001 - AUG. 2000**

*Is there a way to check components in small power supplies (electronic typewriters) without removing components? Seems like theory discussion doesn't cover troubleshooting.*

Components in a power supply or other circuit can usually be checked without removal. If the circuit is able to have power applied, it may be easier to troubleshoot when "live." (Use caution when testing any live supply. Note that even a battery-operated switching power supply may have very high voltages present.)

If the circuit is being tested with power applied, then an oscilloscope could be used to check for the proper voltages and waveforms. A multimeter could also be used very effectively. If power cannot be applied, for example, maybe it is blowing fuses or some part is smoking, then an oscilloscope would be useless.

Different power supply types exist and the troubleshooting points vary with each. A typical transformer/rectifier/filter arrangement would be easier to troubleshoot than a switching power supply. Most work can be performed with a digital multimeter. Although it may make things easier if schematics are available, they are most often not necessary.

When troubleshooting a power supply, it depends upon the defect symptoms as to what makes sense to check. A typical troubleshooting sequence with no power applied, using a multimeter is as follows:

Examine the obvious things. First, visually inspect the circuitry, looking for burnt components, cracked solder joints or components, burnt traces, indications of leaking capacitors, damaged line cords, etc. Of course, check any fuses, sometimes a fuse blows although no circuit defect exists, but it usually is an indication of a shorted component drawing excessive current.

Semiconductors (transistors, diodes, field effect transistors) in power supplies are usually the shorted component, but a shorted transformer winding can also occur. If a fuse in the primary or secondary of a transformer is blowing, an easy way to check the transformer is to isolate (disconnect) the secondary from the rest of the circuit, replace the fuse,

### ANSWER INFO

- Include the question number that appears directly below the question you are responding to.
- Payment of $25.00 will be sent if your answer is printed. Be sure to include your mailing address if responding by E-Mail.
- In most cases, only one answer per question will be printed.
- Your name, city, state, and E-Mail address, (if submitted by E-Mail), will be printed in the magazine, unless you notify us otherwise with your submission.
- The question number and a short summary of the original question will be printed above the answer.
- Unanswered questions from a past issue may still be responded to.
- Comments regarding answers printed in this column may be printed in the Reader Feedback section if space allows.

### QUESTION INFO

**TO BE CONSIDERED FOR PUBLICATION**

All questions should relate to one or more of the following:
1) Circuit Design 3) Problem Solving
2) Electronic Theory 4) Other Similar Topics

**INFORMATION/RESTRICTIONS**

- No questions will be accepted that offer equipment for sale or equipment wanted to buy.
- Selected questions will be printed one time on a space available basis.
- Questions may be subject to editing.

**HELPFUL HINTS**

- Be brief but include all pertinent information. If no one knows what you're asking, you won't get any response (and we probably won't print it either).
- Write legibly (or type). If we can't read it, we'll throw it away.
- Include your Name, Address and Phone Number. Only your name will be published with the question, but we may need to contact you.

# TECH FORUM

**ANSWERS TO #9005 - SEPT. 2000**

*Can the small bobbin and cylinder-shaped fixed inductors found in computer monitors and TVs be used as "RF chokes" in radio construction projects?*

*How do you test the appropriateness of these inductors for radio projects?*

*Also, what is the purpose of the small disk-shaped permanent magnets attached to one end of some of these inductors?*

**#1** The inductors used in TV and monitors are designed to work at power line or deflection frequencies (60 Hz to 15 KHz) and would not be suitable at high frequency. The inductance at high frequency would be no better than air core.

The permanent magnet is used to compensate for DC current in the coil. The DC current biases the core, reducing the inductance. The magnet cancels the bias, restoring the zero bias inductance. You can find a lot of information and downloadable software at **www.micrometals.com**

**Russell Kincaid**
**Milford, NH**

**#2** A good RF choke should have a low impedance at DC and a high reactance at the frequency it is supposed to block. Measuring its resistance at DC and its impedance at the desired RF is the basic test of a suitable choke.

There are some other problems you must consider.

The core material will increase the choke's inductance, but only over a limited range of frequencies and DC bias currents. Too much DC bias current will saturate the core material and drastically reduce the inductance.

This problem appears if there are large DC currents, many turns, or high permeability cores. You can test for this problem by measuring the RF inductance twice. First with no DC bias and then with the DC bias the circuit will use. If the change in measurements is moderate (say less than 2:1), then the choke is probably okay. If the DC biased impedance is much smaller than the no bias measure, then the core has saturated and the choke is not suitable.

The core material usually only works well over a limited range of frequencies. If you measure the Q at several different frequencies, it should hold up well over a band of frequencies. If you operate the choke within that band, then it should give you good performance. It is also possible to operate above that band (ferrite beads do this), but then the choke behaves more like a resistor (dissipating power as heat) than an inductor.

Inductors also have a self-resonant frequency (SRF) where the stray capacitance of the winding resonates with the inductance. Use an inductor as an RF choke at or below its self-resonant frequency. Choke performance decreases above the SRF.

In high-power circuits, power dissipation can be a problem. Calculate the power dissipation (the I-R loss including the RF losses) and compare it to the power rating of similarly sized resistor. If the choke gets too hot, the core material's properties will change, and it may stop looking like a choke and turn into a piece of wire.

I have never seen a permanent magnet attached to a coil. It might be used to offset the field caused by a DC bias, but I'm suspicious of the effectiveness and the cost. Why not use more ferrite in the core? Maybe the magnet cancels the external field to avoid disturbing the TV deflection system.

**Gerald Roylance**
**Mountain View, CA**

and apply power. If the fuse blows, the transformer is bad. Shorted components would be indicated by zero resistance across the component's leads when measured with a digital multimeter.

The most common component failures involve semiconductors. First, suspect high heat producing semiconductors such as large transistors mounted on a heatsink.

Diodes and transistors may be checked while in the circuit using a multimeter with diode test. To do this, check diodes with the test leads in one direction, then reverse the test leads on the diode. There should be conduction in only one direction. Transistors may be checked in the same way. Conduction should exist in only one direction from base to emitter and base to collector. Check from emitter to collector that no conduction exists. Check some known good semiconductors to become familiar with this.

If the device exhibits conduction in an unexpected direction, then it will be necessary to examine the circuitry to find if the device is, in fact, defective or if there is another reason for the conduction.

An example would be a resistor across the base-emitter junction causing conduction in both directions. You may desolder a suspected leg from the board making sure that contact with the trace is removed, then check the junction again (being careful that you are not pushing the leg back into contact with the trace while testing).

Familiarize yourself with the transistors being tested as sometimes a transistor may appear to be shorted when, in fact, you may be measuring an internal resistor or diode. If a switching power supply has power in, but no output voltage, note that switching power supplies have a protection circuit that shuts down the switching action if a short exists in the output. It may also shut down on over-voltage conditions.

Resistors may be measured in the circuit, although usually their values will read much differently from their actual values because of their connection to other circuitry. A resistor's in-circuit measured value should never be greater than it's marked value. In this case, a value that is far from the expected value would be suspect. Maybe a 10-ohm resistor is reading 1,000 ohms. Upon removal, most often a resistor measuring in this manner would be found to be open (no reading on the multimeter).

The question would then be if the resistor failed on its own, or if another component's failure (usually a shorted semiconductor) caused it? The resistors to suspect first are any that are standing up off the board and are of a different body color than a usual resistor (tan).

Examples are light blue, red, or white resistors. Most of these will be a low value, maybe in the range of .3 to 10 ohms. Often these are fusible resistors. If one is found to be open, again, usually it has failed because of a shorted semiconductor.

Capacitors are more difficult to check. If one is bad, most often it will be an aluminum case electrolytic. Other types of capacitors, such as ceramic disc rarely fail.

The first electrolytics to suspect are those located near a heat source such as a transistor mounted on a heatsink or a power resistor. Bad electrolytics can be the cause of improper regulation in a switching power supply or low-voltage output in a linear supply. If an electrolytic has vented (top has split open, or bottom rubber seal has blown), this is an indication that the voltage applied to the capacitor has exceeded its rating. The same thing could happen if the capacitor is installed with reversed polarity. It is difficult to check capacitors with a multimeter. It is possible though, to analyze circuit function to arrive at the defective capacitor.

In general, the hotter a component is and the higher the voltage a component is handling, the more likely it is to fail. These are some ideas to get you started. A good way to learn is to measure components in a known good supply, so you start getting an idea of typical multimeter readings to expect.

**David Wolff**
**San Jose, CA**

**ANSWER TO #9008 - SEPT. 2000**

*I need a wiring diagram for a DC power supply for a Hewlett Packard Laserjet series II printer.*

The schematics were never widely distributed. Canon kept them as a company secret, and even HP printer designers were forbidden to see them.

Consequently, the HP service manuals did not have schematics.

**ANSWER TO #8004 - AUG. 2000**

*I work with AVR microcontrollers which are being clocked with an external crystal or oscillator. I would like to be able to change the clock rate (slower) via an external circuit triggered either by an outside event or by the micro itself.*

There are two sources for the clock signal. One is the 8 MHz clock. The other is from a slower clock.

The 8 MHz can simply be an oscillator module with TTL and CMOS compatible output. The slower clock can be a 555 timer running in astable mode or a CMOS relaxation oscillator made from a hex Schmidt inverter chip.

See **www.WFTelectronics.com** for details of slow oscillators.

The clock select line controls which clock is presented to the microprocessor. Zero means slow and one means the 8 MHz oscillator. A dual D-flop (7474 type) is used to synchronize events on the falling edge of the 8 MHz clock. The value of the clock select line is latched through at Q of D-flop 1 on the falling edge of the * MHz clock. When both the 8 MHz and the slow clock are low, the value of clock select is latched through at Q of D-flop 2.

If the 8 MHz clock is being used and we switch to the slow clock, the 8Z signal (see diagram) is held low as soon as the fast clock goes low. This is accomplished by D-flop one (wait for slow signal). As soon as the slow clock goes low as well, slow starts clocking and becomes the clock provided to the microprocessor.

If the slow clock is being used and we switch to the 8 MHz clock, the switch to the fast clock does not occur until both the slow clock and the fast clock are low. This prevents glitches.

OR gate 2 chooses to forward one of the two clocks as long as the other is held low.

You can contact me via **www.WFTelectronics.com** with any questions.

**Gus S. Calabrese**
**Denver, CO**

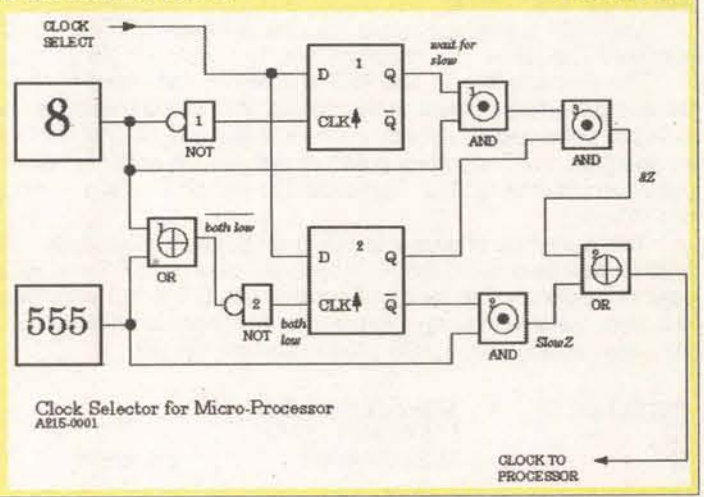

Clock Selector for Micro-Processor
A215-0001

Some intrepid souls have reverse-engineered schematics (I have one for part of the AC power module), but they are hard to find and contain errors. You will also spend a lot of time debugging and chasing parts. There is a simpler option.

The used prices on Canon SX engine laser printers have crashed. Six months ago, they were about $50.00. Two months ago, Halted Specialties was selling them for $25.00. Two weeks ago, I could have picked up four LaserWriter II-NTX for $7.00 each.

Instead of repairing the DC power supply, you might buy a beat-up surplus printer and exchange the power supply. In the bargain, you might get a half-used up printer cartridge worth $30.00 or even a completely working printer. Alternatively, you can buy the DC power supply from The PrinterWorks **www.printerworks.com**. They have an excellent web site.

You should also be aware of why the prices have crashed. The paper feed mechanism on the SX engine relies on a rubber roller that hardens and fails with age. Almost all the printers I see now have this problem, so even if you fix the DC power supply, your paper feed will probably fail soon.

You can buy a Paper Pick-up Roller Ass'y (RG1-0931-060) from The PrinterWorks for about $13.00. Buying just the pick-up roller is even cheaper, but you have to remove the old one from the shaft. It takes about 30 minutes for the renewal, and you must take out the DC power supply to do it.

The repair steps are as follows: Remove the main cover (eight screws) and disconnect the control panel. Remove the front panel bracket (six screws, one ground wire, a cable restraint, and a fiber optic cable). Remove the DC power supply (three screws and the motor connector); use a screwdriver to pry the power supply out — there are some connectors underneath. Remove the pick-up roller assembly (two screws).

**Gerald Roylance**
**Mountain View, CA**

**ANSWER TO #9004 - SEPT. 2000**

*I need information on how to build ferrite antennas for the AM broadcast and shortwave bands?*

The information about designing ferrite antennas is scattered, sketchy, and full of misinformation. Don't believe everything you read. You also need a good background in transformers, coil winding details, and field strengths.

The *ARRL Antenna Book* (about $30.00), which you might find in your public library, has about two pages of design notes and several practical designs.

The treatment is reasonable, but it confuses voltage and power and makes some faulty conclusions about SNR and the number of turns. The practical designs tend to omit the rod characteristics, the number of turns, and the design impedance levels. It is a place to start, it will help make some workable antennas, but it does not offer a solid engineering base. It does, however, have a good bibliography.

The book *Antennas* (John Kraus, McGraw-Hill) has several pages on ferrite rod antennas. His material is accurate, has good examples, but is very dense. For example, he correctly computes the SNR from the atmospheric noise level (effective temperature = 10 billion degrees Kelvin at 1MHz) rather than the antennas physical temperature (300 degrees Kelvin). Your public library may have this book (several of my local libraries do). The book does a superb job about the antenna performance and electrical models, but offers no advice about practical details or circuit design.

**Amidon 714-850-4660** is a good source for ferrites (they even sell Litz wire, which is hard to find now). They stock some inexpensive ferrite rods, and you can special-order ferrite strips (which should make better antennas). Their technical data book ($8.00) describes material properties (such as loss tangents) and part specifications, but you could survive with just their catalog. You probably want material #61. The tech data book has some design advice condensed from DeMaw's *Ferromagnetic Core Design Handbook*, which was also a source for the *ARRL Antenna Book*.

That's a start, but I still have many questions about ferrite loops. By the way, you don't need the ferrite if you are willing to make the antenna a little larger (say a 10-inch diameter wire loop). Even if you need a ferrite antenna, you might build some wire loop antennas first.

**Gerald Roylance**
**Mountain View, CA**

**ANSWER TO #9006 - SEPT. 2000**

*I need two circuits to run from a 12VDC gel-cell or car battery for my RC gas powered car. One circuit must be 1.5 volts and provide up to 4-5 amps. I need to be able to adjust the glow plug current due to the change in resistance when hot, and it should have a meter in the circuit to monitor the current flow and adjust as needed.*

*The second circuit is to charge the AA batteries in the controller and receiver in the car. It needs to run from the same 12VDC.*

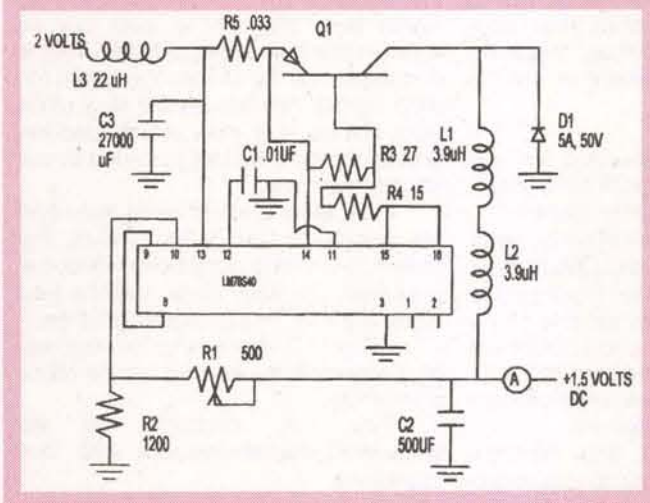


First, the 1.5 volt supply: The LM78S40 IC is available from Digi-Key. It is a switching regulator which in this design runs at 30 KHz. If you are running from a car battery, you need L2 and C3 to filter out spikes from the automobile system, otherwise you don't need them when using a gel-cell.

The .033-ohm resistor provides current limiting. You will need 10 0.33- ohm resistors in parallel to get .033 ohms.

The PNP transistor could also be a P-type MOSFET, both Digi-Key part numbers are given. The resistors are 1/4 watt except as otherwise noted.

The way it works is: The PNP transistor switches on, charging the inductor and providing current to the output. When the transistor switches off, the inductor continues to provide current to the output until the transistor switches on again. Two inductors in series are used in order to handle the 10 amps peak current. The 500 uF capacitor, C2 smoothes out the voltage ripple, down to 0.1 volts.

The parts list shows a 27,000 uF capacitor because I could not find a 500 uF that was rated for 10 amps ripple current. R1 and R2 provide voltage control feedback. The range of control with R1 is 1.3 volts to about 1.6 volts. The best place to find an inexpensive ammeter is an auto parts store. Or JC Whitney catalog lists a ±30 amp meter for $5.00.

| Parts List | Digi-Key Part No. | |
|---|---|---|
| IC | LM78S40CN-ND | |
| Q1 | 2SB974A-ND | transistor |
| Q1 | IRF9Z24N-ND | MOSFET |
| D1 | G1820CT-ND | 5A, 50V fast recovery |
| L1, | L2 DN4495-ND | 3.9 uH, 9.75A |
| R1 | CT2156-ND | 500 ohm pot |
| C2 | P6552-ND | 27,000 uF, 16 volts |
| C1 | E2103-ND | .01uF 250 volts |
| C3 | P6552-ND | 27,000 uF, 16 volts |
| L3 | DN4504-ND | 22 uH, 5.2 amps |
| R2 | 1.2KQBK-ND | 1200 ohms, 1/4 watt |
| R3 | 27QBK-ND | 27 ohms, 1/4 watt |
| R4 | 15QBK-ND | 15 ohms, 1/4 watt |
| R5 (use 10 in parallel) | 0.33W-5-ND | 0.33 ohms, 5 watts each |

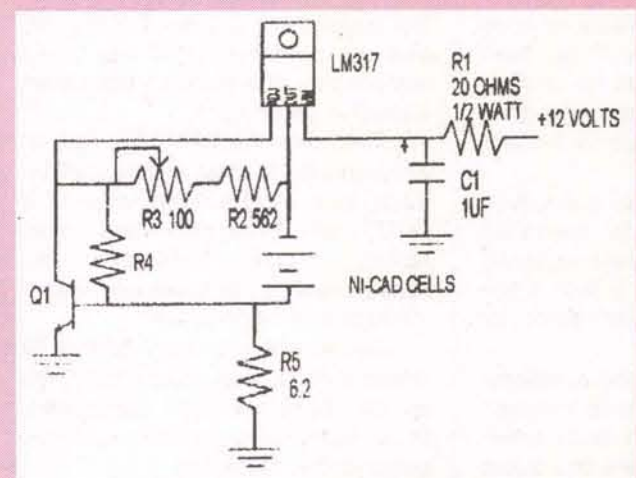


Second, the battery charger for Ni-Cad cells. This circuit will charge two or four cells in series, in a fast charge mode. If you have a bad (shorted) cell, the others can be overcharged. The cells should fully charge in an hour, if not, suspect a bad cell.

The LM317 is a voltage regulator, trimmed for 1.3 volts, and current limited via Q1 to 100 mA. Almost any general-purpose NPN will work for Q1. You can leave the cells on charge indefinitely if the cells are good, the circuit will not overcharge.

| Parts List | Digi-Key Part No. | |
|---|---|---|
| IC | LM317EMPCT-ND | 1.5 amp, TO220 case |
| R1 | 20H-ND | 20 ohms, 1/2 watt |
| R2 | 562XBK-ND | 562 ohms, 1/4 watt, 1% |
| R3 | CT94W101-ND | 100 ohm pot |
| R4 | 619XBK-ND | 619 ohms for two cells |
| R4 | 1.87KXBK-ND | 1870 ohms for four cells |
| R5 | 6.2QBK-ND | 6.2 ohms, 1/4 watt |
| C1 | P6237-ND | 33 uF, 25 volts |
| Q1 | ZTX455-ND | general-purpose NPN |

**Russell Kincaid**
**Milford, NH**

# Nuts & Volts Book Store

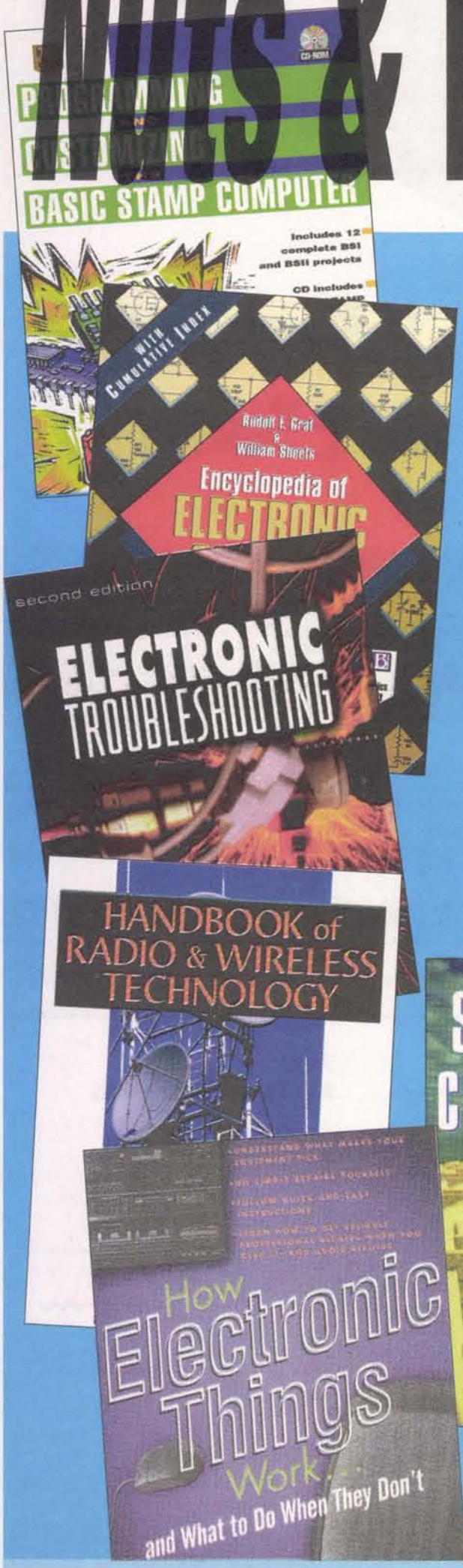


BOOKS PUBLISHED BY MCGRAW HILL

| AUTHOR/TITLE | REG PRICE | SUB PRICE |
|---|---|---|
| Axelson, JL – Making Printed Circuit Boards | $22.95 | **$20.65** |
| Brown, RM & Lawrence – How to Read Electronic Circuit Diagrams | $19.95 | **$17.95** |
| Carr, J – Practical Antenna Handbook | $49.95 | **$44.95** |
| Carr, J – Secrets of RF Circuit Design | $29.95 | **$26.95** |
| Davidson, HL – Build Your Own Test Equipment | $22.95 | **$20.65** |
| Davidson, HL – Radio Receiver Projects You Can Build | $21.95 | **$19.75** |
| Davidson, HL – Troubleshooting and Repairing Consumer Electronics Without a Schematic | $24.95 | **$22.45** |
| Edwards, S – Programming and Customizing the BASIC Stamp Computers | $34.95 | **$31.45** |
| Gibilisco, S – Amateur Radio Encyclopedia | $29.95 | **$26.95** |
| Gibilisco, S – Handbook of Radio and Wireless Technology | $44.95 | **$40.45** |
| Gibilisco, S – TAB Encyclopedia of Electronics for Technicians and Hobbyists *(hard cover)* | $69.50 | **$62.55** |
| Gibilisco, S – The Illustrated Dictionary of Electronics | $39.95 | **$35.95** |
| Goodman, R – How Electronic Things Work ... and What to Do When They Don't | $24.95 | **$22.45** |
| Graff, R – Encyclopedia of Electronic Circuits | $39.95 | **$35.95** |
| Horn, DT – Basic Electronics Theory | $26.95 | **$24.25** |
| Horn, DT – Ready-to-Build Telephone Enhancements | $17.95 | **$16.15** |
| Lenk, J – Circuit Troubleshooting Handbook | $39.95 | **$35.95** |
| McComb, G – The Robot Builder's Bonanza | $18.95 | **$17.05** |
| Predko, M – Handbook of Microcontrollers | $54.95 | **$49.45** |
| Predko, M – Programming and Customizing the PIC Microcontroller | $39.95 | **$35.95** |
| Predko, M – Programming and Customizing the 8051 Microcontroller | $39.95 | **$35.95** |
| Scherz, Paul – Practical Electronics for Inventors | $39.95 | **$35.95** |
| Sinclair, J – How Radio Signals Work | $24.95 | **$22.45** |
| Tomal, D/Widmer, N – Electronic Troubleshooting | $34.95 | **$31.45** |
| Veley, V – The Benchtop Electronics Handbook: 260 Most Common Popular Electronics *(cloth cover)* | $65.00 | **$58.50** |

**Call 1-800-783-4624 today!** WE ACCEPT VISA AND MASTERCARD

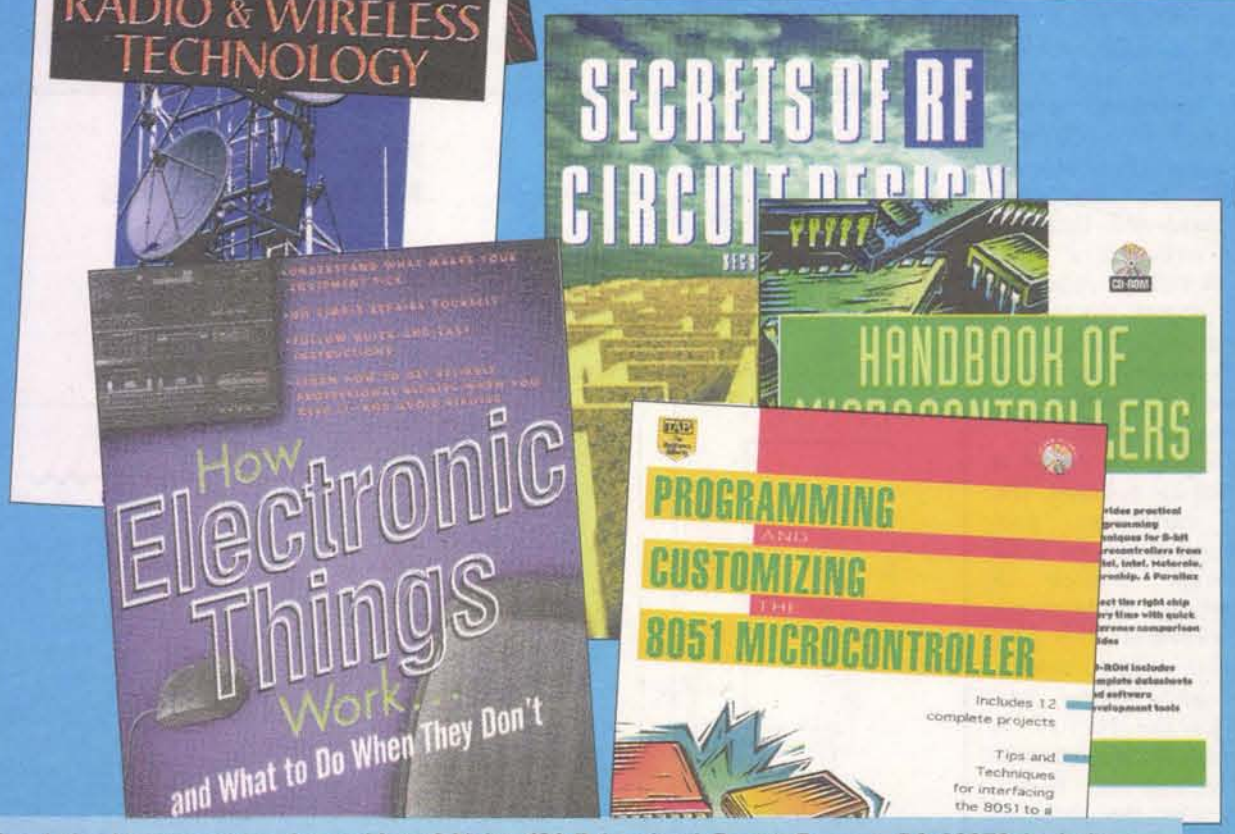


# 10% OFF

**FOR PAID SUBSCRIBERS**

**Send check or money order to Nuts & Volts, 430 Princeland Court, Corona, CA 92879. Include a complete shipping address (no P.O. Boxes, please). Shipping & handling $4.50. CA residents add 7.75% sales tax. Or, call our toll-free order-only line at 1-800-783-4624 and use your MasterCard or Visa. *ALL ORDERS MUST BE PREPAID.***

# The "XYLOTRON" — 'Bot with a Beat

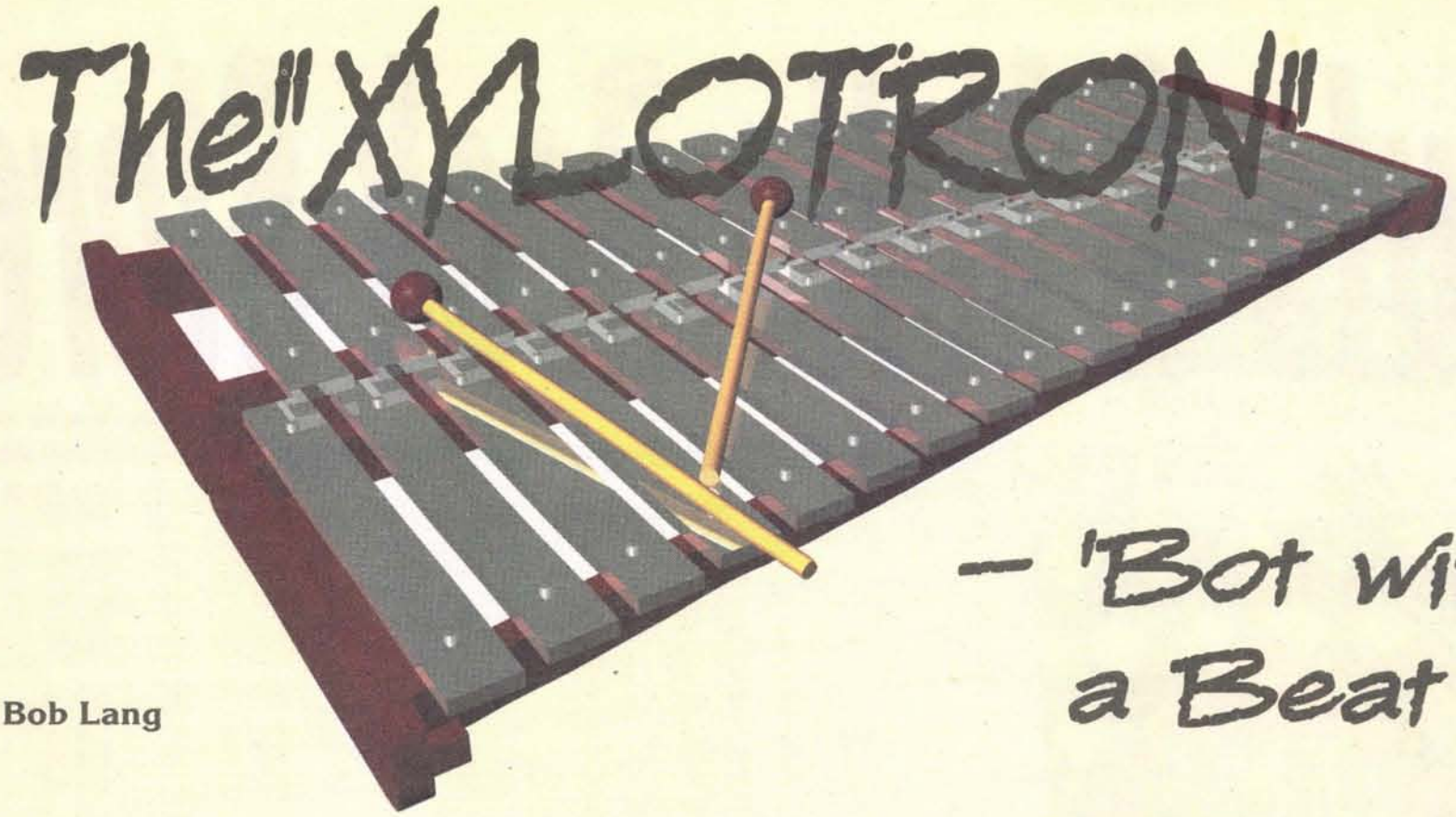

by Bob Lang

## INTRODUCTION

This project begins with the idea of creating a MIDI musical instrument for under $150.00. It was desired that the instrument could be played manually or by a computer via the MIDI interface. The final project turned out to be the conversion of a xylophone to MIDI. This is an instrument anyone can build and play that I call the "XYLOTRON."

## MIDI DECODING

Let's briefly review the Musical Instrument Digital Interface (MIDI). In 1982, the primary vendors of keyboard synthesizers hammered out the specifications for MIDI, which was a combined language and transmission protocol that allowed the sending and receiving of information to synthesizers.

MIDI information is sent through the connecting cables serially, that is, one bit at a time, 31,250 bits/second. When an instrument receives a MIDI status byte such as "note on," it must receive the eight bits of information that makes up the "note on" byte, decode it, and act upon it.

MIDI commands are divided into status and data bytes. MIDI status bytes always have the high order bit set equal to one. Data bytes always have the high order bit set equal to zero.

Normally, a "note on" status byte will be followed by two data bytes giving the note and velocity which, at some later time, would be followed by a "note off" status byte with the same two data bytes. Sometimes, however, a "note on" status byte will be followed by more than two data bytes thereby turning on more than one note with a single "note on" status byte. Likewise, a single "note off" status byte can be used to turn off multiple notes. These mode changes also need to be handled.

## INTERFACE CONTROLLER

The MICROCHIP 16F877 peripheral interface controller (PIC) is the brain of the system. This is a cool 40-pin chip that runs at 20 MHz, has a built-in serial port, up to 32 usable output pins, in-circuit programming, eight KB of re-programmable flash memory — all for under $10.00. The circuit for the controller is shown in Figure 1. The 6N138 is a high-speed optical isolator that can handle the MIDI baud rate. Included in the circuit is a 7805 five-volt voltage regulator and a 100mF electrolytic capacitor for producing the +5 volts necessary to run the PIC from the +12-18 volt power supply.

Building the circuit is only half the solution. The chip must be programmed to do the MIDI decoding. Source 1 (Microchip Technology, Inc.) provides free software for writing, assembling, and linking software for the 16F877. A programmer that includes a development breadboard can be obtained from Source 2.

The programmer connects to the parallel interface of a computer.

```
0030  1E8C  RECBYTE  BTFSS  PIR1, RCIF  ; LOOP TILL THERE'S
0031  2830           GOTO   RECBYTE     ; SOMETHING TO RECEIVE
0032  0818           MOVF   RCSTA,W     ; GET THE STATUS WORD
0033  00A0           MOVWF  TEMP        ; PUT IN TEMP
0034  18A0           BTFSC  TEMP,1      ; CHECK FOR OVERFLOW
0035  283B           GOTO   RRESET
0036  1920           BTFSC  TEMP,2      ;  CHECK  FOR  FRAMING
ERROR
0037  283B           GOTO   RRESET
0038  081A           MOVF   RCREG, W    ; INPUT THE BYTE THEN
0039  00A0           MOVWF  TEMP        ; MAKE A COPY IN TEMP
003A  0008           RETURN
003B  1786  RRESET   BSF    PORTB,7    ;TURN ON LED ON PIN 40
                     ; TO INDICATE OVERFLOW OR FRAMING ERROR
003C  20C8           CALL PAUSE        ; SHORT WAIT
003D  1218           BCF RCSTA,4       ; DISABLE RECEIVE TO
                     ; CLEAR FRAMING AND OVERFLOW ERROR BITS
003E  1386           BCF    PORTB,7    ; CLEAR ERROR LED
003F 2  0C8          CALL PAUSE        ; SHORT WAIT
0040  1618           BSF RCSTA,4       ; RESTART THE RECEVER
0041  2827           GOTO CMD_START
```

**FIGURE 2 — Portion of 16F877 Source Coding**

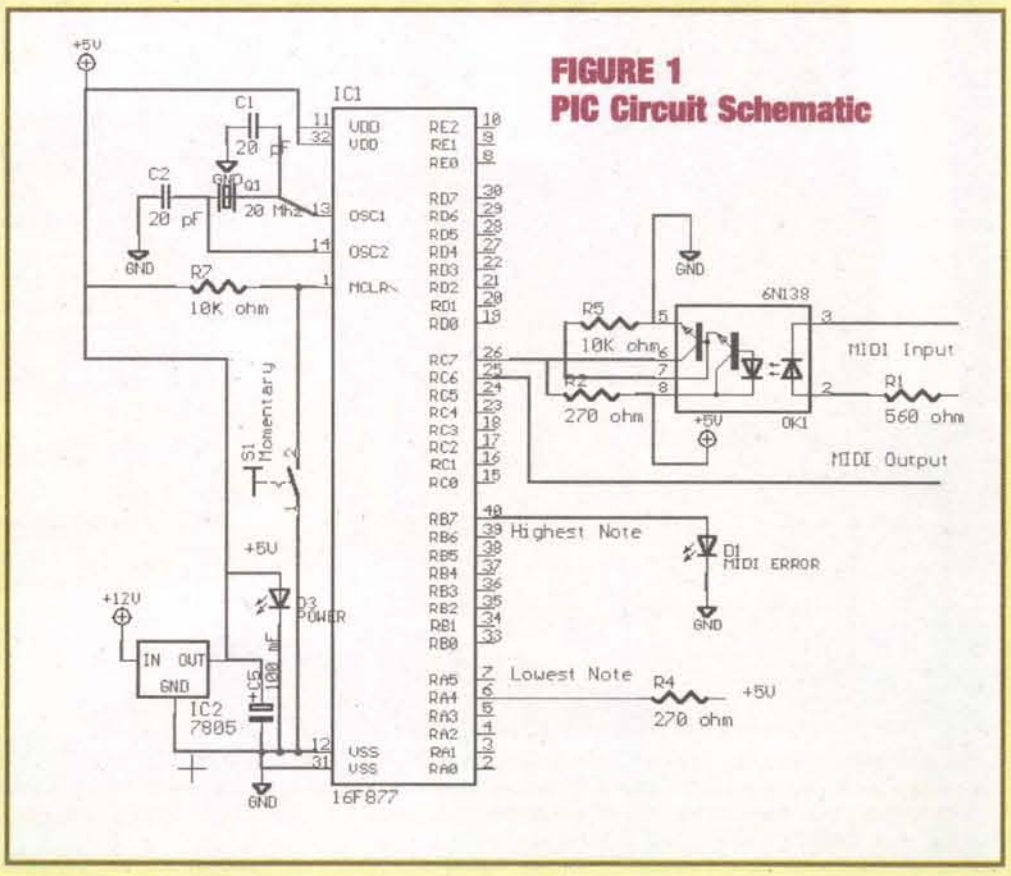

**Source 1**
**Microchip Technology, Inc.**
Technical information on 16F877 PIC, MPLAB Integrated Development Environment software for PICs at www.microchip.com.

**Source 2**
**Peter Anderson**
PIC programmer kit, programmer software, PIC books, 16F877 PIC at www.phanderson.com.

**Source 3**
**XYLOTRON home page**
Source coding for XYLOTRON, Preprogrammed 16F877 PIC, additional XYLOTRON information and pictures at www2.netdoor.com/ ~rlang/xylotron/xylotron.htm.

**Source 4**
**Digi-Key**
Power transistors, optical isolators, 16F877 PIC at www.digikey.com.

**Source 5**
**Protel Software**
EASYTRAX software for designing and printing circuit boards at www.cia.com.au/rcsradio/ibmezcad.htm.

**Source 6**
**Circuit Specialists, Inc.**
Photosensitive printed circuit boards, developer, etchant at www.webtronics.com. See their ad on Page 94.

**Source 7**
**Electronix Express**
Magnet wire, LEDs, voltage regulator, resistors, diodes at www.elexp.com. See their ad on Page 19.

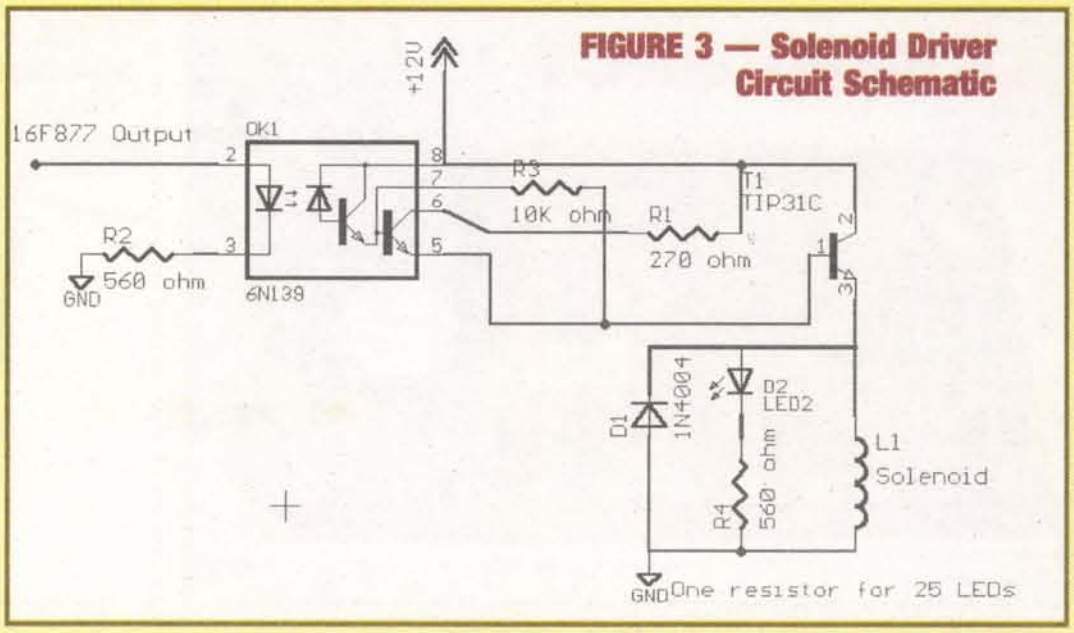


**FIGURE 3 — Solenoid Driver Circuit Schematic**

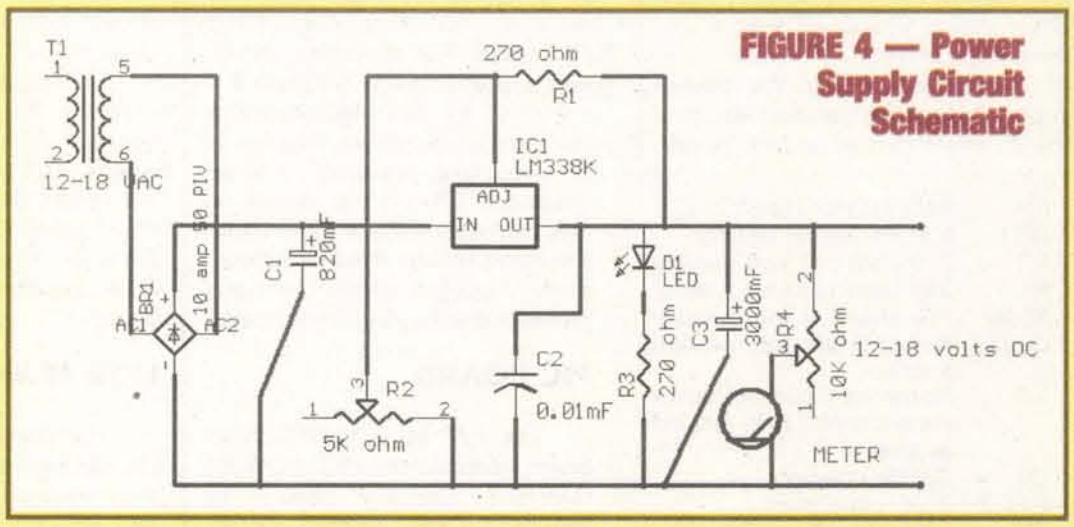


**FIGURE 4 — Power Supply Circuit Schematic**

The linked program in ".HEX" file format can then be downloaded from the computer to the programmer. Once the chip is programmed, it remembers the program until it is erased or re-written.

The program can be obtained free of charge from Source 3 in either source (XYLOTRON.ASM) or hex (XYLOTRON.HEX) format. A short portion of the coding, written in MICROCHIP assembly language, that reads the MIDI input is given in Figure 2. The program does not use interrupts and features a start-up test section.

When the program starts, each note is played from highest to lowest to verify that the driver circuits are working. The program only reacts to MIDI "note on" and "note off" commands for MIDI notes 48-72 on the lowest MIDI channel (0). All other MIDI commands, MIDI notes, and MIDI channels are ignored.

When the program receives a "note on" status byte, it will decode it and set the mode to "note on." The two data bytes that follow will set the output pin corresponding to that note HIGH. It will remain HIGH until a "note off" status byte is received for that note or another "note on" status byte for that note is received with a zero velocity.

If additional data bytes follow the "note on" they are interpreted as additional notes to be turned on. The receipt of a "note off" status byte will set the mode to "note off" and all subsequent data bytes are interpreted as additional notes to be turned off.

## POWER SUPPLY/DRIVER BOARD

The link between the PIC brain and the note actuator muscle is the solenoid driver circuit. Figure 3 shows the driver circuit for one solenoid. There are 25 of these circuits, one for each 16F877 output note. Parts for the driver circuits were from Source 4. An optional LED


**Electro Mavin**
**Great Buys - Great Products - Great Gadgets**
**Check Out Our Great WebSite at**
**http://mavin.com**
**For Computer Items, Hobbiest Projects, Microwave Goodies and Some of the Greatest Prices on the Web....**
**800-421-2442 or FAX 310-632-3557**
**E-Mail**
**john@mavin.com or sean@mavin.com**

**Weeder Technologies** VISA MasterCard **RS-232 Stackable**
www.weedtech.com *Data Book Available* 850-863-5723

**Digital I/O Module** - 14 I/O pins individually configured for input or output. Turn on/off relays. Sense switch transitions, button presses, 4x4 matrix decoding using auto-debounce and repeat. One-shot pulse output with user programmable length. **$49**

**Analog Input Module** - 8 input pins. 12-bit plus sign self-calibrating ADC reads voltages from 0 to 4095 mV using 1 mV resolution. Supports single-ended, differential, or pseudo-differential modes. Software programmable alarm trip-points for each input. **$59**

**Stepper Motor Driver** - Drives a unipolar stepper motor rated up to 25VDC @ 2A. Uses automatic self-generated parabolic acceleration/deceleration curves for smooth start and stop motion. Software programmable ramp-rate and speed. 24-bit absolute motor position counter. Limit-switch input. **$59**

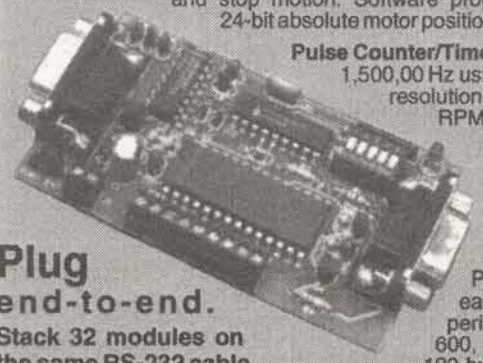

**Pulse Counter/Timer** - Read frequency from 0.50000 to 1,500,00 Hz using floating decimal point and 5-digit resolution throughout range. Measure period, RPM, duty cycle, pulse length, velocity of a projectile using a pair of trip wires. Accumulate pulse count. **$69**

**Multi-Drop Peripheral Interface** Plug a third-party RS-232 peripheral into the multi-drop bus. Appended header character allows PC to exclusively communicate with each of up to 32 devices. Supports peripheral baud rates of 75, 150, 300, 600, 1200, 1800, 2400 and 9600. Built-in 122-byte FIFO RAM buffer. **$59**

**Plug end-to-end.**
**Stack 32 modules on the same RS-232 cable.**

**FIGURE 5**
**Power Supply/Driver Circuit Board**

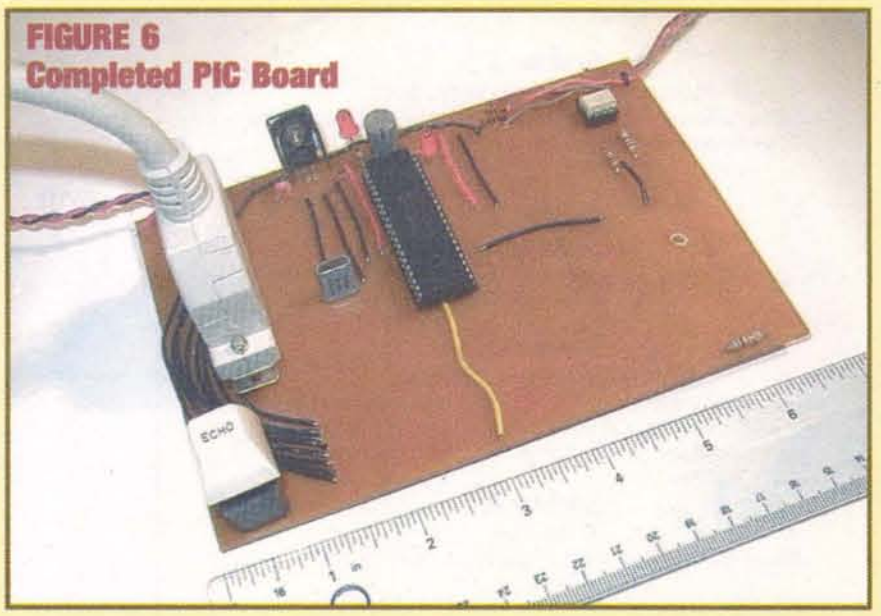

**FIGURE 6**
**Completed PIC Board**

and resistor can be placed in each driver circuit which will light when the note is played.

I decided to build the power supply (minus the transformer) and the 25 driver circuits on one board. The LM338K voltage regulator comes in a TO3 case and is rated for 5.0 amps. The schematic for the power supply is given in Figure 4.

A 5.9" by 9.8" light-sensitive printed circuit board was chosen. It is important to have a large capacitor, C3, on the output to help maintain voltage when multiple solenoids are fired simultaneously. Figure 5 shows the completed power supply/driver board.

| | |
|---|---|
| IC1 | MICROCHIP 16F877 PIC |
| OK1 | 6N138 Optical isolator |
| R2 | 270 ohm 1/4 watt resistor |
| R1 | 560 ohm 1/4 watt resistor |
| R5,R7 | 10k ohm 1/4 watt resistor |
| D1,D2 | Red LED with internal limit resistor |
| S1 | Momentary contact switch connects MCLR to ground to reset |
| Q1 | 20MHz crystal |
| C1,C2 | 20pF capacitors |
| IC2 | 7805 +5 volt regulator |
| C5 | 100mF electrolytic cap |
| C4 | 22mF electrolytic cap |

**Table 2 – PIC Parts List**

| | |
|---|---|
| T1 | TIP 31C NPN transistor |
| OK1 | 6N139 Optical isolator |
| R1 2 | 70 ohm 1/4 watt resistor |
| R2,R4[1] | 560 ohm 1/4 watt resistor |
| R3 | 10K ohm 1/4 watt resistor |
| D1 | 1N4004 Diode |
| D2[1] | LED[1] |

Note: There is a common R4 for all of the optional LED driver circuits

**Table 1 – Driver Parts List**

## PIC BOARD

The 6.5" by 4.5" PIC circuit board contains the PIC and MIDI interface circuitry shown in Figure 1. The printed circuit boards in this project were designed using the free software from Source 5. The full-size circuit board patterns are available at no cost at Source 3. The positive etch process was used. Printed circuit boards and supplies are available from Source 6.

A 25-pin cable was used to connect the PIC board to the driver board. A 25-pin parallel cable was used to connect the driver board to the solenoids. Figure 6 shows the completed PIC board. Table 1 is the parts list for the driver board and Table 2 is the parts list for the PIC board.

## HOW IT WORKS

The purpose of the electronic circuit is to decode the MIDI signal from the computer/MIDI keyboard and activate/deactivate the proper note actuator solenoid for a "note on"/"note off" MIDI message.

The MIDI serial signal is received by the 6N138 optical isolator on the PIC board. This electrically isolates the MIDI source from the XYLOTRON and provides a 0-5 volt signal to the Microchip 16F877 peripheral interface controller serial input pin.

The PIC software decodes the MIDI messages and turns on or off one of 25 output pins on the 16F877 chip. The outputs are routed to the driver board. If the software detects a DATA FRAMING or DATA OVERFLOW on the serial input line, then an LED tied to pin 40 will be lit. The error will automatically be reset and the LED turned off after a short period of time.

On the driver board, the signal is routed through a 6N139 optical isolator to isolate the five-volt PIC board voltage from the 12-18 volt driver board voltage. The output of the optical isolator is used to turn on and off the TIP31C output transistor which provides power to the note solenoid.

## XYLOPHONE

The instrument to be played is not critical in this design. I obtained a xylophone with 25 keys (Chromatic range C4 through C6) from an EBAY auction for $28.00. Since there are five unused output pins on the 16F877 PIC, any sort of xylophone, glockenspiel, or marimba with up to 30 keys can be used. The key instrument characteristic used in the design is that the keys can be hit from the top or the bottom.

## ACTUATOR DESIGN AND CONSTRUCTION

If the 16F877 peripheral interface controller is the brain of the system, the note actuator is the muscle. I decided to use a solenoid-type actuator. The first step was to design an actuator. There are some general guidelines for dimensions one can use in designing a solenoid. Two equations are used:

$$\frac{L_{coil} + L_{plunger}}{2} > K_1 * L_{stroke}$$

$$L_{plunger} > K_1 * L_{coil}$$

where $L_{coil}$ is the length of the wire coil, $L_{plunger}$ is the length of the iron plunger, $L_{stroke}$ is the desired stroke, $K_1$ is the constant between 1.2 and 1.5.

I desired a stroke length of approximately one inch and wound up with the design shown in Table 3. A couple of rules to remember: **1.** Two times more coils of wire = four times more force. **2.** Two times more current = four times more force.

The actual coil was wound around a 1/4-inch styrene plastic tube, 2.25 inches long obtained from a hobby store. The ends of the coils were fabricated from 7/8" square pieces of 0.08" thick sheet styrene. Quarter-inch holes were drilled in the center of the sheet

| CHARACTERISTIC | DESIGN |
|---|---|
| LOW VOLTAGE | 12 VOLT |
| LOW CURRENT | ~0.75 AMP |
| WINDING | 160 FT |
| COIL HEIGHT | 1 INCH |
| WIRE | #30 MAGNET |
| IRON CORE | 1.5 INCH IRON |
| CORE WINDING TUBE | .25 INCH DIAMETER |
| STROKE | ~.75 INCH |

**Table 3 – Actuator Description**


**PROGRAMMABLE SOLENOID**

- Low cost motion control
- Wide operating voltage (12 - 28)
- Onboard programming and parameter storage
- Self-contained electronics

**Rotary (PPS-1)**

**$95.00** + $5 s/h

**Linear (PPS-2)**

**$145.00** + $5 s/h

- Simple connection only 3 wires: Power, Ground, and CMD signal
- Long Life: Brushless ball bearing stepper
- Constant current Torque/Force

The Picard Programmable Solenoid (PPS) delivers the motion capability of a sophisticated stepper motor system with the simplicity of a solenoid. This eliminates the non-linear and erratic banging motion of a traditional solenoid. The electronics of the PPS allows the user to program and store the desired motion profile using the simple user interface. The innovative PPS gives programmability to the motion of a solenoid without the expense of a costly motion control system.

**PICARD INDUSTRIES**
**Specializing in Miniature Smart Motors and Sensors**

4960 Quaker Hill Road
Albion, New York 14411

**Phone/Fax 716-589-0358**

Email: jcamdep4@iinc.com
www.picard-industries.com

Write in 150 on Reader Service Card.

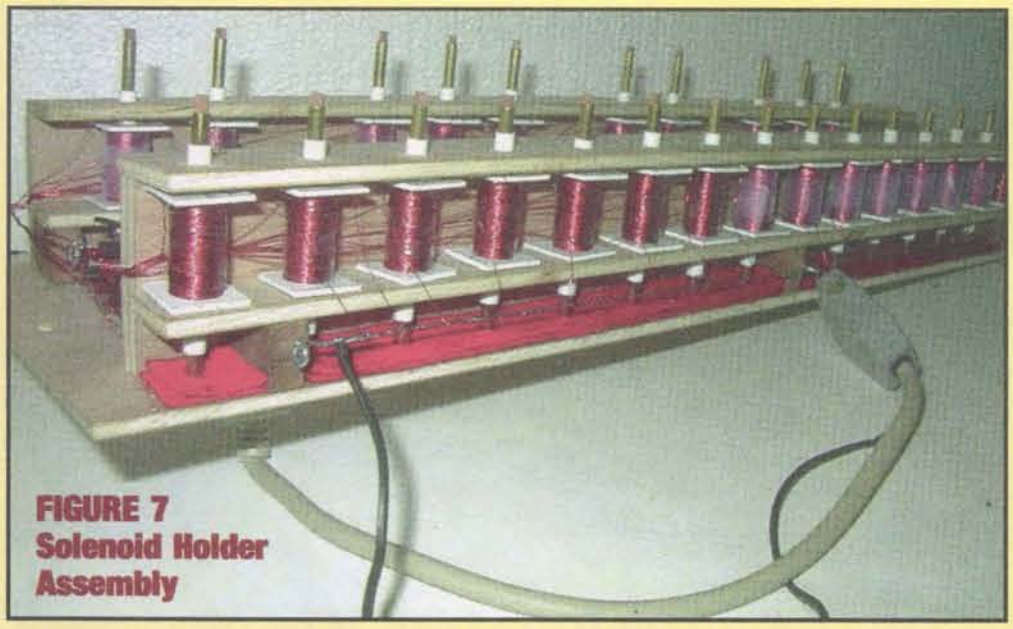

**FIGURE 7**
**Solenoid Holder Assembly**

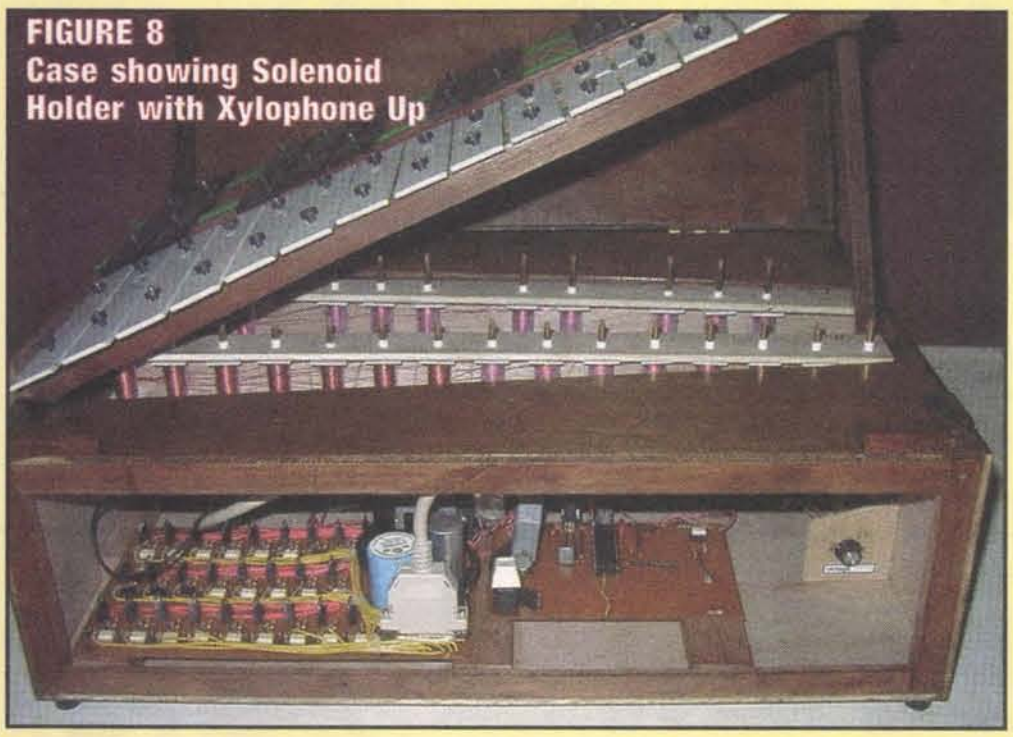

**FIGURE 8**
**Case showing Solenoid Holder with Xylophone Up**

styrene square. One square was glued 1/4 inch from the end of the tube and the other was glued 1.0" from the first square with plastic model cement.

Drilling a 1/4 inch hole in styrene plastic can be a bit of a problem; I found that a hand powered drill or just holding the drill bit in your hand and turning it drilled the hole without ripping the soft plastic. After the glue dried, 160 feet of #30 magnet wire obtained from Source 7 was wound onto the one-inch coil. The winding of the coils was the most time-consuming part of the project, but it was automated somewhat with a winding jig powered by an electric screwdriver.

The rest of the actuator consisted of 3/16" brass tubing obtained from a hobby store. The tubing was cut to a length of 3.0 inches for the white keys and 3.375 inches for black keys. The iron core — a 12D nail cut to 1.5 inches — was inserted into one end of the tubing and was held by a drop of glue.

A key design choice for the actuator was what material would actually hit the xylophone. Many xylophones have beaters made of wood or plastic. I tried just using the brass tube to hit the key, but my wife said it was too loud! Eventually, we found a volume we both liked by tipping each brass tube with a piece of wood that actually did the hitting. The wood gave a nice musicbox volume.

## CASE LAYOUT

The case was just a box to hold the electronics and the xylophone. The dimensions were not critical. Since the notes are actually played by the solenoid-driven beaters hitting the bottom side of the keys, the solenoids are mounted under the xylophone which sits on the top of the box. The case was constructed of 1/4" hardwood plywood with the dimensions of approximately 22" x 15" x 10".

The first piece of the frame that was built was the solenoid holder. This wooden assembly holds the 25 solenoids at a precise 1-3/8" spacing in two rows of 15 and 10, corresponding to the white and black keys on the xylophone. Connections for all the solenoids are terminated at a DB-25 connector located on the bottom of the assembly.

The dimensions of the solenoid holder assembly are 6" x 21.5" x 2.0" and are shown in Figure 7. The next step in construction was the placement of the solenoid holders in the cabinet. The solenoid holder was positioned in the case so that the brass rods came within 0.5" of the bottom of the xylophone key as shown in Figure 8.

Access to the electronics is through a 8" x 22" removable panel in the front as shown in Figure 9. The solenoid holder assembly can be removed through the top when the xylophone is removed; controls, MIDI connection, and power cable are contained in a 4" x 6" recessed

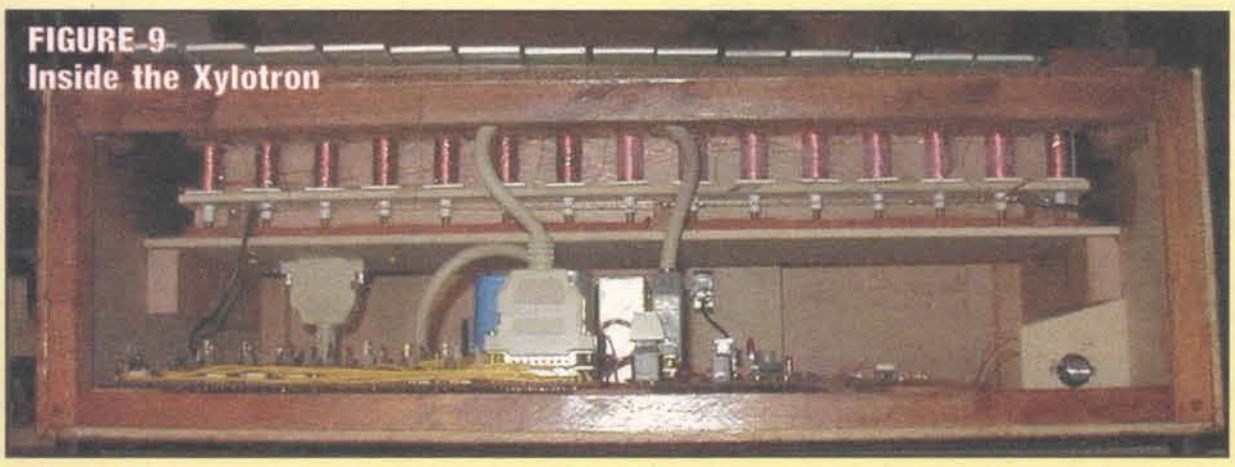

**FIGURE 9**
**Inside the Xylotron**


**Software for learning & designing**

This new range of products, from Matrix Multimedia in the UK, includes resources and tools to help you learn about electronics and helping you to design electronic products and systems.

**A complete course in electronics**: Made up of 3 CD ROMs: Electronic Circuits & Components, Digital Electronics, and Analog Electronics.

**A complete course in programming the PICmicro series of microcontrollers:** the PICtutor CD ROM and development board. Comprehensive tutorials, assembler / send package, and flexible development board.

A course in **Filter design**: Filters CD ROM.

A **complete Electronics CAD suite**: CADPACK includes software for schematic capture, circuit simulation, circuit animation and even PCB layout.

CAD PACK
shareware available from: www.matrixmultimedia.co.uk /cadpack.htm

A scalable **digital logic simulator**: Digital Works allows complex digital logic circuits to be built and tested on-screen for learning logic design and

digital WORKS
shareware available from: www.dworks.co.uk

| | Student | Institution | 10 user |
|---|---|---|---|
| each program / CD ROM | $50 | $99 | $300 |
| PICtutor CD + development board | $149 | $300 | |

CD ROMs now available from all Velleman distributors

Complete product descriptions available at:
**www.matrixmultimedia.co.uk**

or order immediately at:
Bright Future
6540 Cedarview Court,
Dayton Ohio 45459-1214
Tel: (937) 438 5373 Fax: (937) 438-3229

Write in 151 on Reader Service Card.

THE RF CONNECTION

The RF Connection
213 North Frederick Ave.
Suite 11NV
Gaithersburg, MD USA
20877

**http://www.therfc.com/**

**Complete Selection of MIL-Spec Coax, RF Connectors and Relays**

**UG-21B/U N Male** for RG-213/214.....$5.00
**UG-21D/U N Male** for RG-213/214.....$3.25

**N Connectors for 9913/Flexi4XL/9096**

**UG-21B/9913** ..... $6.00 **Pins Only**.....$1.50
**UG-21D/9913** ..... $4.00 **Extra Gasket**..... .75

**Amphenol 83-1SP-1050 PL-259** .....$0.90
**UG-176/U** Reducer RG-59/8X. .25 or 5/$1.00
**UG-175/U** Reducer RG-58/58A .25 or 5/$1.00
**Silver Teflon PL-259/Gold Pin** .....
.....$1.00 or 10/$9.00

**MIL-Spec Coax Available** (Teflon, PVC IIA)

**New Product:** Belden 9913F. 9913 with High Density PE Foam dielectric, stranded center cond. and Duobond III Jacket.....
..... .80/ft or $76.00/100ft

**Also New:** 9092, RG8X with Type II Jacket
**Intro Price** .....$23.00/100ft

**Call for Specials of the Month**

**Full Line of Audio Connectors for Icom, Kenwood, and Yaesu**

**8 Pin Mike Female** .....$2.50
**8 Pin Mike Male Panel**.....$2.50
**13 Pin DIN for Kenwood**.....$2.75
**8 Pin DIN for Icom** .....$1.00
**8 Pin DIN for Kenwood**.....$1.50

**Prices Do Not Include Shipping**

**Orders** 800/783-2666
**Info** 301/840-5477
**FAX** 301/869-3680

Write in 149 on Reader Service Card.

panel in the back. The finished XYLOTRON and back control panel are shown in Figure 10.

## TESTING AND ADJUSTMENT

The testing of the XYLOTRON electronics proceeded from breadboard prototyping to printed circuit board. The PIC board is connected to the +12-18 volt power supply on the power supply/driver board and a MIDI output. The MIDI output can be a MIDI keyboard or a computer with MIDI output.

Check for solder bridges and bad solder joints before turning on the power. The power on test should activate each solenoid and flash each LED in order from highest to lowest. Most of the problems I had were due to bad solder joints or solder bridges.

A five-volt source can be applied to each driver circuit input with the PIC board disconnected to isolate the problem of an individual note to the driver board or the PIC board. If the electronics check out, make sure that the actuator slides freely in the coil and is not binding.

Finally, a note should be played on the MIDI keyboard and the appropriate note's solenoid should fire and note LED should light if the optional driver LEDs were installed. Try playing some chords and multiple solenoids/LEDs should activate/light at the same time.

The last thing to do is to play one of the MIDI songs arranged for XYLOTRON available through Source 3 on the computer and kick back while the XYLOTRON beats out some Bach or Beethoven or Tito Puente. **NV**

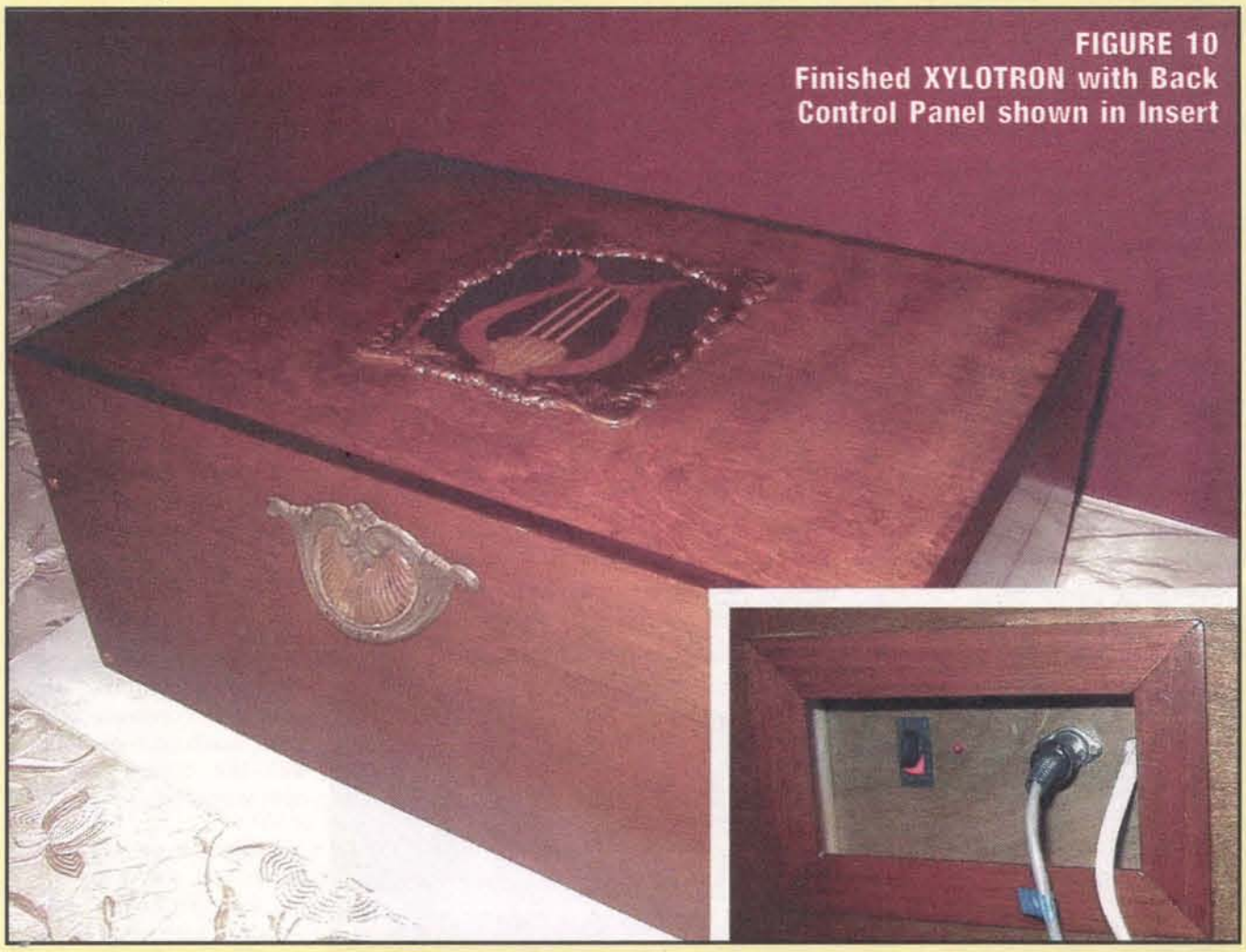

**FIGURE 10**
**Finished XYLOTRON with Back Control Panel shown in Insert**

# FLAME FLICKER SIMULATOR

by Dennis Eichenberg

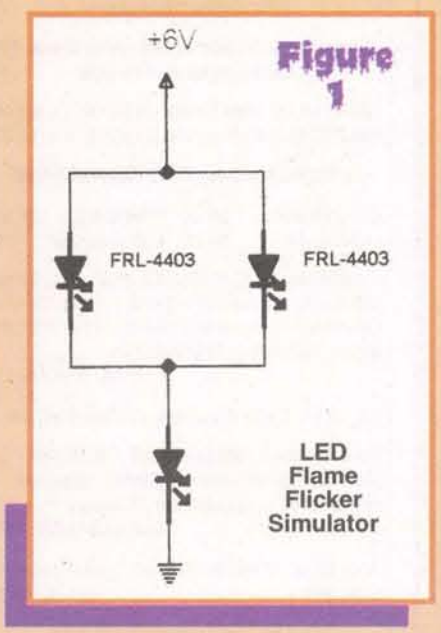


**Figure 1**

The circuits shown provide a simple and inexpensive way to simulate a flame flicker. These circuits are ideal for jack-o-lanterns and other similar applications. The circuits require very low power, and thus are well-suited for battery-powered applications. The circuits start immediately and are not affected by temperature variations. The circuit shown in Figure 1 drives an LED, and the circuit shown in Figure 2 drives an incandescent lamp.

The heart of both circuits is the FRL-4403 red flashing LED (part no. 276-036 at RadioShack). It operates directly from 5V and produces a consistent pulse of light at approximately 1 Hz without a time-constant capacitor. There is a slight variation in frequency from LED to LED. This frequency variation is used to produce the flicker effect.

In Figure 1, two flashing LEDs are connected in parallel and in series with standard LED3. LED3 is on whenever either LED1 or LED2 is on. LED3 is off whenever both LED1 and LED2 are off. Thus, LED3 tends to flicker nicely due to the frequency variation in LED1 and LED2. A yellow LED3 produces a very nice candle effect, but different LEDs can be experimented with to produce the desired result.

Figure 2 is the same basic circuit as Figure 1, with the addition of transistor Q1 and bias resistors R1 and R2 to drive LAMP1. LAMP1 can be any incandescent lamp with a current rating up to 200 mA. Colored lamps work well, and a 12-volt lamp operated from a six-volt source produces a nice candle effect.

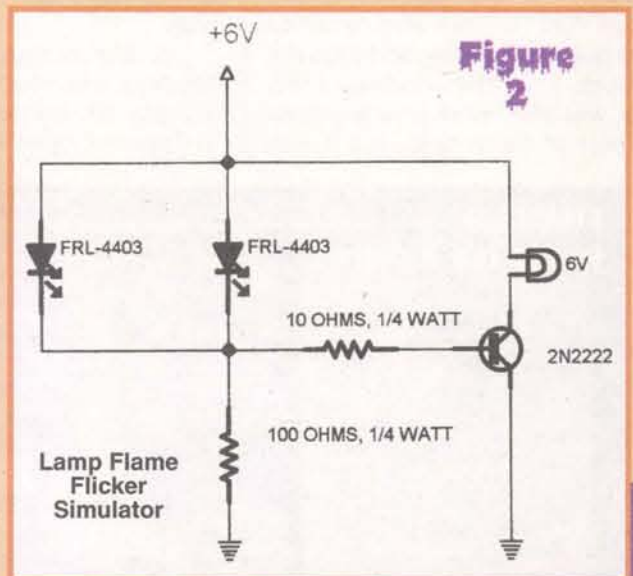


**Figure 2**

## PARTS LIST

| No. | Description |
|---|---|
| LED1, 2 | LED Flashing, Red, RadioShack No. 276-036 |
| LED3 | LED, Yellow, RadioShack No. 276-021 |
| LAMP1 | Incandescent lamp, 6-volt, RadioShack No. 272-1098 |
| Q1 | Transistor, NPN, 2N2222, RadioShack No. RSU 11328499 |
| R1 | Resistor, 10 ohms, 1/4 watt, RadioShack No. 271-1301 |
| R2 | Resistor, 100 ohms, 1/4 watt, RadioShack No. 271-1311 |

# New Product News

## SUPERNOTES CLEARS DESKTOP CLUTTER & ORGANIZES YOUR INFORMATION

Control your clutter in a few clicks. SuperNotes v1.0 is a Windows application that makes it quick and easy to organize notes and other pieces of information that accumulate on home and office desks.

SuperNotes are digital notes which can be displayed on your computer screen. The software, developed by Integratech Software, allows you to organize any type of information – to-do lists, birthdays, anniversaries, telephone numbers, telephone calls, appointments, and other reminders.

SuperNotes lets you create an unlimited number of digital notes that can contain a wealth of information about any subject. Since SuperNotes is OLE-enabled, you can even link or embed related images such as pictures, maps, and documents, as well as sound and video clips into each note. SuperNotes lets the user define custom note templates and tailor the program to meet individual needs. Each note supports fonts, colors, tab settings, paragraph settings, and other word processing standards enabling a note to be created just the way you like it.

SuperNotes is Internet-ready. Send email or launch your web browser and visit favorite Internet web sites with a single click. Email addresses and Internet web sites can be organized by any criteria you desire and can have an unlimited amount of descriptive text to describe information important to you.

SuperNotes has built-in reminders to help you track special dates and events. An alarm can be set on any note enabling you to receive a reminder. Alarms can be defined to activate once, every day, every week day, once a week, once a month, or once a year. This feature offers a great way to keep up with birthdays, anniversaries, and other important events.

All notes are maintained in a database by user-definable note type and can be organized and recalled to the computer desktop at any time.

SuperNotes costs $24.00 and may be ordered from Integratech Software's web site. An unlimited site license is also available for $249.00.

For more information, contact:

**INTEGRATECH SOFTWARE**
**P.O. BOX 293403, LEWISVILLE, TX 75067 Fax: 972-420-7880**
**EMAIL: rf@integsoft.com**
**WEB: http://www.integsoft.com**

## MODEL 555 DIGITAL DELAY/PULSE GENERATOR

Berkeley Nucleonics releases the Model 555 digital delay/pulse generator with one nano-second delay resolution. In addition to independent delay and width selection on each channel, it now includes selectable TTL/CMOS or adjustable amplitudes up to 15V into high impedance.

Available configurations are two, four, or eight channels of output.

The model 555 includes the ability to enable/disable channels, to gate the outputs, to provide bursts from each channel, to divide the triggers by a different N for each channel, and to even add customized timing via software.

The digitally-controlled time delays and widths may be programmed from the front panel or via the GPIB or RS232 interface.

For more information, contact:

**BERKELEY NUCLEONICS CORP.**
**3060 KERNER BLVD., #2, DEPT. NV**
**SAN RAFAEL, CA 94901**
**415-453-9955 FAX: 415-453-9956**
**EMAIL: bernadette@berkeleynucleonics.com**
**WEB: www.BerkeleyNucleonics.com**

***Showcase your New Products here!***
**Send all press releases or information/photos to:**

**Nuts & Volts Magazine**
**New Product News**
**430 Princeland Court, Corona, CA 92879**
**or E-Mail to newproducts@nutsvolts.com**

## SC100 AUTO-DIALER FOR SECURTY AND CONTROL

LJB Engineering introduces the SC100 auto-dialer. This board connects to standard phone lines and cellular phones (with appropriate interface) and dials two phone numbers when an alarm condition occurs.

Up to 24 digits per number can be programmed into memory. The unit uses EEPROM memory so no battery backup is required.

When an alarm call is made by the SC100, the unit plays error tones and a voice message to alert the operator of the situation.

The SC100 only requires a phone line and 12VDC to operate. The 12VDC alarm input triggers on falling or rising edge input.

The on-board speech chip allows you to record up to a 20-second message.

The SC100 answers after a programmable number of rings and can be called to turn the relay on or off over the phone. The relay programs as either a one shot or latched on/off operation. One shot time delay from one second to 99 minutes.

Uses for the Secure Control 100 include: 1) Home security system auto-dialer. Connect sensors such as motion detectors and door switches and the unit will phone you when the alarm is tripped. 2) Mount on remote machinery and use the alarm input to monitor operation. If the unit shuts down, the SC100 will phone you and notify you. 3) Connect to equipment that must be turned on or off over the phone.

The SC100 is priced at $299.00.

For more information, contact:

**LJB ENGINEERING**
**RR 1 BOX 680, DEPT. NV**
**DESHLER, NE 68340**
**402-365-4214**
**http://ljbengineering.8m.com**

## HOME THEATER LIGHTING CONTROL KIT

Control two lights and one appliance (expandable to 16 lights/appliances) from a wireless remote. Perfect for dimming the lights before a show in your home theater and for bringing the lights back up afterward.

Appliance module (built into the wireless base unit) can be used to remotely control power to appliances such as coffeemakers, fans, radios, or another light (without dimming).

Remote can also be used to open/close X10 drapery controllers. Works with all X10-compatible products.

The transmitter uses four AAA batteries (not included).

The Home Theater kit includes: one 4000 X10 wireless remote system, and two 2000 lamp modules.

The Home Theater kit is complete for only $59.95.

For more information, contact:

**LORD & WYATT COMMUNICATIONS, INC.**
**147 HALSEY ST., Dept. NV/HTLC**
**BROOKLYN, NY 11216**
**718-789-7329, ext-12, FAX: 718-789-7329**
**EMAIL: AtHomeThings@aol.com**
**WEB: www.At-HomeTechnology.com**

## IBM HOME DIRECTOR X10 KIT

Lord & Wyatt Communications, Inc., announces At-Home Technology IBM Home Director Kit. Home Director gives you the power to control and program timed schedules and macros for over 100 lights and appliances throughout your home all from the convenience of your PC.

With the macro capability, a single command either from your PC or from any X10 transmitter can trigger a sequence of X10 commands. One press can turn on a series of lights and appliances.

Programmed events and macros can be downloaded to the memory on the Home Director for stand-alone operation (with the PC turned off). Your PC does not have to be left on to run the schedules or macros once they have been programmed.

The kit includes a 6-in-1 IR remote control that can control most commonly available audio/video components, as well as X10 via RF (using the included X10 RF receiver base). With this one remote you will be able to turn on your TV, dim the lights, and even close your drapes.

The Home Director plugs into the serial port of any PC running Windows 95, 98, or Windows 3.1. with a CD-ROM drive.

The Home Director is functionally identical to the X10 Activehome CM11A unit and will work with all software and accessories designed for the Activehome unit. You may expand the Home Director Kit with virtually any X10 compatible product.

The Home Director starter kit includes: one IBM Home Director PC interface, one software CD-ROM, one 6-in-1 remote control, one X10 16-device RF base, and one X10 lamp module.

The IBM Home Director starter kit is available for only $28.95.

For more information, contact:

**LORD & WYATT COMMUNICATIONS, INC.**
**147 HALSEY ST., DEPT. NV**
**BROOKLYN, NY 11216**
**718-789-7329, ext-12**
**FAX: 718-789-7329**
**EMAIL: AtHomeThings@aol.com**
**WEB: www.At-HomeTechnology@aol.com**

## High Performance Auto Ranging DMM

*New to our DMM line-up and possibly (probably) the best DMM value anywhere! Includes: Analog Bar Graph! Auto-Ranging! Data Hold! Temperature Probe! Frequency Test! Continuity Test! AND MORE!*

ONLY $29.95

NOW IN STOCK!

**Features**

**Data Hold:** Freezes reading for easy checking
**Auto Ranging:** For easy, precise range settings
**Range Hold Control:** allows for manual selection of your test range
**3-3/4 Digit LCD Display:** Reads up to 3260. Easy to read display.
**Function Dial:** Easy to use to select measurement type or turn unit off.
**4 Jack Plug-ins:** Safety design with different capacities for different functions.
**Diode, Continuity Check Push-Button:** For toggling between diode check and continuity check.
**Low Battery Indicator:** Advises you when it's time to change battery.
**Extra Long 44" Test Leads:** Helps get to hard to reach places
**Screw-On Alligator Clips:** Convert one or both probe tips to alligator clips.
**Fuse-Protected Circuitry**
**Built-In Stand:** Makes one hand operation easier.
**Shock Absorbing Rubber Carrying Case:** with convenient probe storage clips and hanging tab. Helps protect the DMM from damage if accidentally dropped.

**Measures:**
**DC Volts:** up to 1000V
**AC Volts:** up to 750V
**AMPS:** up to 20 Amps (AC & DC)
**Resistance:** up to 30M ohm
**Continuity Check:** with audible signal (signal sounds if resistance is less than 20 ohms. Display reads actual resistance).
**Frequency:** (1KHz to 300KHz) displays both digital and bar graph reading
**Transistor hfe Test:** Display shows approximate hfe value based on test condition of 10uA base current and Vce of approx. 3V.
**Temperature Test:** Measures from 0° to 1832° F (probe supplied!)
**Diode Test:** Tests if diodes are shorted or open

**Specifications**

**Accuracy**

| | |
|---|---|
| Vdc: | ±1.0% reading +5 ditis |
| Vac: | ±1.5% reading +8 digits |
| Adc: | ±1.2% reading +5 digits |
| Aac: | ±1.5% reading +5 digits |
| Resistance: | ±1.5% reading +5 digits |
| Frequency: | ±3.0% reading +5 digits |
| Temperature: | ±1.0% reading +6 digits |

**Input Impedance:** 10Mohm (Vdc/Vac): over 100Mohm on 300 mVdc range
**Requires two AAA batteries sold separately.**

**#CSI9903**

## 2GHz RF Field Strength Analyzer

ONLY $1589

- Frequency Range: 100KHz to 2.060MHz
- Narrow Band FM (NFM), Wide Band FM (WFM), AM and Single Side Band (SSB) Modulated Signals May Be Measured
- PLL Tuning System for Precise Frequency Measurement and Tuning
- LED Backlight LCD (192x192 dots)
- Built-In Frequency Counter
- Hand-Held and Battery Operated
- All Functions are Menu Selected
- RS232C for PC Interface and Printer

*See the web site for details*

**#3201**

## Removable Hard Drive Rack For IDE/Ultra DMA Hard Drives

*We Sold Over 14,000 in 1998!*

ONLY $14.95 any qty.

This product can be used with any 3-1/2 IDE hard drive up to 1" high. It includes an electronic keylock for safe removal and insertion. Made of ABS 707 fireproof plastic. Use this product to protect sensitive hard drive data, take your hard drive between work and home or even set up different users with their own hard drives that they physically insert every time they use a PC. Other models available from C.S.I. include RH10 series and RH20 series, which are interchangeable within the same interface design (IDE or SCSI).

***Other Models are Available.*** *See www.web-tronics.com under "hard drive and accessories" for more details and pictures.*

**RH-10C-IDE**

## Removable Hard Drive Rack with Auto Door And Cooling Fan

ONLY $18.95 any qty.

- Auto door on the outer frame
- ABS material of outer frame, High efficiency cooling fan
- Worldwide patent pulling function handle
- CE Approved
- Coating iron bottom cover
- For IDE interface
- For 1" high 3.5" HDD
- Not compatible with our RH10 & RH20 series. Compatible with our RH17-IDE model.

**#MR-27**

*Details at www.web-tronics.com*

## Auto-Temp Solder Station with Ceramic Element

ONLY $39

- With Ceramic Heating Element for More Accurate Temp Adjustment
- 3 Conductor Grounded Power Cord
- 250°C-480°C (470°F-900°F)
- Fast Heating Feature

**SR-976**

*Extra Tip Options Available. See Web!*

**For More Info See www.web-tronics.com**

CTRL - D to bookmark this site

**www.web-tronics.com**

Don't forget the dash

- Easy to Navigate
- Includes a Search Engine That Really Works
- New Items Added Constantly

**Circuit Specialists Inc.**

**In Business Since 1971**

## Mini CCDs (B/W & Color (

**Sensational NEW Design for Small Observation Cameras. *Smaller and Better!***

LOWER PRICES

- ***Ultra Miniature Design***
- ***Black & White Versions Only 25mm x 25mm***
- ***Color Versions Only 32mm x 32mm***
- ***Available in Standard Lens or Pinhole Lens***
- ***All Include Pre-Wired Cable Harness for Video & Power***
- ***12V Regulated Power Supply Required (120mA typical power consumption (***
- ***0.1 LUX Rating (B/W ( 1 LUX (color (***
- ***CCD Area Image Sensor for Long Camera LIfe***
- ***Back Light Compensation Circuit***
- ***Built-In Electronic Auto Iris Lens***

*Detailed Specs on the Web*

**VMCW-H11A** 32mmx32mmx30mm, Color CCD with standard lens, pre-wired cabling, 12V DC Power $139.00/$129.00 5 or more

**VMCW-H12A** 32mmx32mmx19mm, Color CCD with pinhole lens, pre-wired cabling 12V DC Power Input $139.00/$129.00 5 or more

**VCC-3232** 32mmx32mm, CMOS Color with standard lens, See our website for details $79.00 any qty.

**VMPS-718A** 25mmx25mmx30mm, B/W CCD with standard lens, pre-wired cabling, 12V DC Power Input $59.00/$49.00 5 or more

**VMPS-250A** 25mmx25mmx15mm, B/W CCD with pinhole lens, pre-wired cabling, 12V DC Power Input $59.00/$49.00 5 or more

## CCD B&W Board Cameras

- ***ASIC CCD Area Image Sensor***
- ***Extremely Low Power Consumption***
- ***0.5 Lux Min Illumination***
- ***Built-In Electronic Auto Iris for Auto Light Compensation***

*Detailed Specs on the Web*

LOWER PRICES

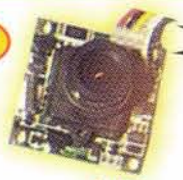

**VM1030PA-B** 30mmx30mmx25mm, Pinhole lens, 12V $39.00 any qty.

**VM1030A** 30mmx30mmx26mm, Standard lens, 12V $39.00 any qty.

**VM1035A** 42mmx42mmx25mm, Standard lens, 12V with back light compensation $49.00 any qty.

**VMCB21** 44mmx38.5mmx28mm, with 6 infra-red LEDs, 12V $49.00 any qty.

**VM1036A** 32mmx32mmx25mm, Standard lens, 12V, reverse mirror image feature $49.00 any qty.

## Bullet CCD Cameras

**B&W and Color**

- ***Smart Rugged Metal Housing***
- ***Extremely Low Power Consumption***
- ***12 Volt***
- ***CCD Area Image Sensor for Long Camera Life***
- ***Built-In Electronic Auto Iris for Auto Light Compensation***
- ***No Blooming, No Burning***
- ***0.1 Min Lux Illumination (B&W ( 1 Lux Min Lux Illumination (color (***

*Detailed Specs on the Web*

LOWER PRICES

**VMBLT1020** B&W, 21mm(D)x55mm(L) $49.00 any qty.

**VMBLT1020W** B&W Weatherproof, 21mm(D)x58.5mm(L) $79.00 any qty.

**VMBLTJC19BW** COLOR! Weatherproof, 17mm(D)x88mm(L) $139.00 any qty.

## COLOR CCD Mini Board Cameras

- ***Low Power Consumption***
- ***1 Lux Illumination***
- ***Built-In Electronic Auto Iris for Auto Light Compensation***
- ***Internal Synchronization***
- ***12Volts***
- ***400 TV Lines***

PRICE REDUCTION

*Detailed Specs on the Web*

**VM3010PA** 33mmx33mmx18mm, Pinhole lens $99.00 any qty.

**VM3011-A** 45mmx40mmx24mm, Standard lens, single board $89.00 any qty.

**VM3010-A** 33mmx33mmx32mm, Standard lens $99.00 any qty.

## new! 3-1/2 Digit JUMBO Digital Panel Meters *Check these LOW PRICES!*

NOW IN STOCK!

AS LOW AS $6.25

- 21mm Figure Height
- 5 Volt Common Ground or 9V Independent Power Supply Versions Available
- Voltage Divider Resistors included and max. Measured Range Selectable by Soldering a Selection Joint
- Easy Bezel Snap-In Design (84mm x 41mm rectangular hole typical)
- "0" Reading for "0" Voltage Input
- High Quality SMD Production Method
- Dual Slope Integration A-D Converter System ±0.5% Accuracy

| | | | | |
|---|---|---|---|---|
| **PM-1028A** *LCD* 9V Independent Power Supply Version | 1/$12.95 | 10/$10.89 | 100/$7.99 | 250/$6.25 |
| **PM-1028B** *LCD* 5V Common Ground Power Supply Version | 1/$13.95 | 10/$11.84 | 100/$8.89 | 250/$7.15 |
| **PM-1029A** *LED* 9V Independent Power Supply Version | 1/$14.95 | 10/$12.50 | 100/$9.95 | 250/$7.89 |
| **PM-1029B** *LED* 5V Common Ground Power Supply Version | 1/$15.95 | 10/$13.40 | 100/$10.79 | 250/$8.65 |

## Our Most Sophisticated DMM *We Sold Over 700 Last Year!*

with RS-232 Interface & Software, 3-3/4 Digit, 4000 Count, Auto-Ranging with Analog Bargraph

NOW ONLY $129 *Reg. $169*

*More Details on our Web Site*

- True RMS Mode
- 10MHz Frequency Counter
- Time Mode with Alarm, Clock, and Stop Watch
- Dual Display
- 10 Location Memory
- Min, Max, Avg and Relative Mode
- Decibel Measurement
- Cap and Ind. Measurement
- Temperature Mode (C/F)
- K Type Temperature Probe Included
- Pulse Signal for Logic & Audible Test
- Continuity/Diode Test
- Logic Test
- Auto Power OFF/"Keep ON" Mode
- Fused 20A Input with Warning Beeper
- Back Light
- Data Hold/Run Mode
- Safety Design UL1244 & VDE-0411
- Protective Holster
- Silicon Test Leads

**PROTEK 506**

## new! Hot Air SMD Rework Station

**WOW! ONLY $489**

*Similar Systems Cost 100s More!*

ONLY $489

**#SR-979**

For technicians, service/repair depots and assembly rework. We also stock a selection of nozzles for QFP, SOP & PLCC devices (see our website for selection details). Hot Air temperature variable from 100°C to 400°C (212°F to 754°F) power consumption: 275w max. Auto cooling feature cools system after shut off to extend service life of heating elements and handle. One year limited warranty from C.S.I. **Comes with QFP Nozzle (0.68" x 0.68")**

## new! O'Scope Offer

**30MHz! ONLY $299!**

*Take Advantage of this low price!*

ONLY $299

- *Dual Channel*
- *Dual Trace*
- *Vert Trigger*
- *1 Year C.S.I. Warranty!*

**#OSC-1030**

**Manufactured for CSI by a leading O.E.M. manufacturer. See our website for detailed specifications!**

## new! 2.4 GHz A/V Sender/ Receiver System

ON SALE!

- **Wireless FM transmission of video (color or B/W) and sound (stereo or mono) up to 150 meters (line of sight)**
- **Directional Antenna Design optimizes performance**
- **Use with remote cameras or any input (satellite TV, cable etc.) where wireless transmission is desired. View on a TV set.**
- **Performance through walls varies depending on construction methods etc.**
- **Each set includes a plug-in power supply for the transmitter & receiver.**
- **7 segment LED displays channel (1-4) on receiver & transmitter.**

**CSIHTR2400** *Includes One Transmitter & One Receiver with Power Supplies* ~~$139.00~~ $109.00

**CSIHTR2400TX** *Extra Transmitter/Each Receiver will Monitor up to 4 Transmitters* $89.00

*See more detailed specifications at www.web-tronics.com in the CCD camera setcion.*

## 3000 Series Digital R/O Bench Power Supplies

◆ *Low Cost Single Output* ◆ *3 Amps*

**High stability digital read-out bench power supplies featuring constant voltage and current outputs. Short-circuit protection and current limiting protection is provided. Highly accurate LED accuracy and stable line regulation make the 3000 series the perfect choice for lab and educational use.**

Line Regulation: 2x10 $^{-4}$ +1ma
LED Accuracy: Voltage: ±1% +2 digits
Current: ±1.5% +2 digits
Wave Line Noise: ±1mVrms
Dimensions: 291mm x 158mm x 136mm

**CSI3003:** 0-30v/0-3amp Digital R/O Bench PS, 1x10$^{-4}$+5mv Load Regulation
$99.00 5/$89.00

AS LOW AS $89



Write in 97 on Reader Service Card.

ELIMINATES DEFECTS ON SCSI AND IDE DRIVES

COPIES EVERYTHING PARTITIONS, O/S, THE WORKS!

PARALLEL PORT PRINTS TEST RESULTS

SUPPORTS ALL INTERFACES SCSI, E-IDE, 2.5", SCA

INSTANTLY CLONES ANY SCSI OR IDE DRIVE

BUILT-IN DATA RECOVERY SYSTEM

# CLONE, TEST OR REPAIR ANY HARD DRIVE

"THE MOST COMPLETE HARD DRIVE WORKSTATION WE'VE SEEN!" BOB ROSENBLOOM, DIGITAL VIDEO, INC.

## DRIVE SERVICE STATION

Copy entire hard drives with ease. Drive duplicators are essential tools for dealers and system builders. Don't spend hours installing and formatting drives. Do it instantly with the Pro. Set up any SCSI or IDE drive with your original software. Connect blank drives to the Pro and presss start. You'll copy entire drives faster and more accurately than is possible on any PC. With our combination IDE and SCSI model, you can even copy data between diffferent interfaces. All models include both 2.5" and 3.5" interface adapters. The Pro also supports SCA and Wide SCSI drives.

Choose the Pro, and you'll also have an entire factory drive test and repair system for under $1000. The Pro gives you the ability to copy, reformat, repair, translate, and test any hard drive. Use the Pro to put any hard drive through its paces. A full factory final test and performance analysis is performed. Complete test and repair reports are sent to any standard printer.

**BUY MANUFACTURER DIRECT: $995**

**408 330-5525**

The Pro will also reassign and eliminate drive defects. Here's how it works: First, a precise media analysis system scans the disk for errors. Defects are mapped out, and effectively "erased." The error correcting system then "trains" the drive to permanently avoid defective areas. Data is stored only on the safe areas of the disk. Capacity is reduced by an insignificant amount, and the drive works flawlessly once again. Get the technology used by major repair shops and data recovery centers. The Pro repairs all disk defects caused by normal wear. Drives with mechanical damage may not be repairable.

CSC

**CORPORATE SYSTEMS CENTER**

3310 WOODWARD AVE., SANTA CLARA, CA 95054

WWW.DRIVEDUPLICATORS.COM

Call today for high volume multi-drive copiers and CD Duplicators

Sold and intended for backup purposes only. Copyright laws must be observed.

BASIC Stamp and the Parallax logo are registered trademarks of Parallax, Inc.

# DECORATE YOUR BOE-BOT FOR HALLOWEEN AND WIN PRIZES!

GET YOUR BOT READY.
The Boe-Bot Full Kit (#28132 - $199) includes a BASIC Stamp II module, the new Board of Education Rev. B, the Robotics text, the BASIC Stamp Manual, and example source code. Consider it a **super** BASIC Stamp II Starter Kit. Indicate your chassis color preference (blue, red, gold, silver, or purple) when you place the order on-line or by phone.

DECORATE, CUSTOMIZE AND WIN!
Over 3,500 Boe-Bots roam the world. Send Parallax pictures of your customized Boe-Bot before December 31, 2000. **Winners will receive $500, $250, and $100 in Parallax products. All entries will be judged on electronic ingenuity and style.**

To enter send your name, address, picture(s) and description of your Boe-Bot to: Custom Boe-Bot Contest; Parallax; 599 Menlo Drive #100; Rocklin, CA 95765; or **e-mail digital pics** with description and contact information to **contest@parallaxinc.com**



To order on-line visit www.parallaxinc.com
or in the U.S. call toll-free 888.512.1024
(international customers call 916.624.8333)
sales: Monday-Friday 7 a.m. - 5 p.m. PST

PARALLAX inc

Write in 194 on Reader Service Card.

**NUTS & VOLTS MAGAZINE**
**430 PRINCELAND COURT**
**CORONA, CA 92879-1300**